University of Stavanger

Faculty of Science and Technology

MASTER'S THESIS

Study program/ Specialization: Offshore technology, Industrial technology and asset management	Spring semester, 2010 Open access
Writer: Åsbjørn Enerstvedt	…… (Writer's signature)
Faculty supervisor: Conrad Carstensen External supervisor: Graeme Neil, BP Norway.	
Titel of thesis: VRD Plant Performance Testing Project	
Credits (ECTS): 30	
Key words: System design, System testing, Quality assurance, Performance testing, Seawater system, Centrifugal pump, Centrifugal compressor.	Pages: 63 + enclosure: 48 Stavanger, 15/06/2010 Date/year

Frontpage for master thesis
Faculty of Science and Technology
Decision made by the Dean October 30th 2009

Title of thesis:

VRD Performance Testing Project

Topic and scope of work, with activities:

Due to seabed subsidence and ageing facilities, the Valhall field is to have a new integrated Production and Hotel (PH) facility installed to exploit the remaining reserves. The new PH facility comprises a fixed steel platform installed to the south side of one of the existing platforms and linked by two bridges. PH compromises a 180 bed Quarters module and 19 000 m^3/d (oil) and 4 MSm^3/d (gas) processing deck with utilities and flare structure.
Part of the handover process from the Project team to Operation is assurance that the process and utility plant performs according to the design. To achieve this objective the project start up team needs to develop Plant Performance Test procedure that can be executed during the commissioning and early operation phases of the project.
A long with that, the candidate will look closer into one of the systems, the seawater system, and follow the process of selecting the components in a system.

Topic

1) The candidate will give a description of the quality process with verification of the requirements that has been set according to the agreement/delivery of a technical system. This includes every effort from inspection, simulations and calculation to testing of components and systems. In this thesis there is chosen a seawater system.
The quality process starts when selecting equipment and supplier and ends with handing over a complete system to production. Enlightened contents are quality assurance measures, different tests, visit to the construction area, accept criteria, relevant standards, reference literature etc.

2) The candidate will give a literature search to find relevant articles concerning the quality process of such systems. There will also be given a description of the seawater system chosen for VRD, including build-up and function. The description will include an identification of operation and maintenance.

3) The candidate will prepare a performance test/functioning test for the chosen system, and other essential systems in the VRD process module. The candidate should give suggestions to scope of quality assurance measures (f. ex. tests) that should be considered. Further on there should be explained why these tests are relevant and how the test should be carried through.

4) The candidate will prepare a performance test procedure of the following equipment.

- Export compressors
- Crude oil export pumps
- HP/LP flare knock-out drum pumps
- Firewater pumps
- Other utility pumps (e.g. cooling medium, jet water)

The candidate will hand in a detailed work plan to the institute, with a scheme over the disposal time the candidate has got for preparing the thesis.

Student: Åsbjørn Enerstvedt
Office location: BP, Trim-Towers Sandnes

External supervisor: Graeme Neil, BP Norway
Address: Forusbeen 50, Forus, Stavanger
E-mail: neilg@bp.com

Internal supervisor: Conrad Carstensen
Phone number: 97596229
E-mail: CCarsten@broadpark.no

Abstract

This master thesis is written on the subject of BP Norway's installation of a new field centre (PH), at Valhall. The project, called Valhall Re-Development (VRD), needed to outline procedures on how to verify performance of equipment installed into the process module at PH.
The purpose of developing these procedures is to make a program on how to verify that BP Norway, as the purchaser, receives the equipment and systems they have ordered. The aim of the performance test is to verify that the equipment guarantee points are capable of achieving rated production.
Systems that have been specified in the thesis include the seawater system, where a total system description has been given along with maintenance program, operational modus and performance tests.
Other systems that have been specified through the thesis are rotational equipment like firewater pumps, cooling medium pumps, oil booster pumps, oil export pumps and export compressors. For this equipment, a brief performance verification program is outlined to verify that the equipment is capable of meeting the designed criteria's and the specifications BP Norway has set.

Along with the technical part that evolves around the process module at PH, the thesis also consists of a literary part that discusses the various aspects of designing a new system and what phases that has to be considered. This part describes the two parties involved in a trade and what the purchaser has to consider during the designing period. In this lies verification of quality assurance, design criteria's, performance specifications, verification tests etc.

The second part of the thesis gives a well-designed program on how to verify the promised performance and how to locate faults and mismatches. The thesis also consists of a discussion part where different aspects of the thesis are represented. This includes problem approaches related to the procedures and aspects that could lead to gaps in the resulting part.

Preface

This thesis is concerned around BP Norway's project VRD, a project of installing a new field centre at Valhall (PH). The thesis intention was to outline a program for testing the many items of equipment and systems at the new platform. Particular tests were to quality assure the performance of the equipment, to be sure that BP Norway, as the purchaser, got the agreed product.

The thesis is written during the five first months of 2010, at VRD-project's headquarter, Trim-Towers, at Sandnes. This location gave a close collaboration between the candidate and the Start-up team of the project.
The candidate has also had close relation with the University of Stavanger, and with the candidate's internal supervisor.

Through the VRD-project's common document hub, ShareCat, the candidate has had full access to all the relevant documentation of the project. This involves documents from the system designers as well as subcontractors for the different equipments.

Acknowledgments

This thesis is written in cooperation with BP Norway, and is concerned around their project VRD. I therefore have to give my biggest gratitude to this company, which I also am a proud employer of.

In BP Norway, my closest superior during the thesis has been Graeme Neil, who is the Start-Up Manager for VRD, and the process engineer Charles Honner. I therefore wish to give these two men my highest gratitude for all the help and support I have received throughout the project.

I also wish to give my internal supervisor at University of Stavanger, Conrad Carstensen, the highest of appreciations for the help and support I have received throughout the thesis.

Most of all I want to thank my team leaders at Valhall, Arvid Stavland and Dag Adolfsen, who have organized my full-time job offshore in a way that has made it possible for me to graduate through the master degree.

Åsbjørn Enerstvedt

Table of Contents

DEFINITIONS 3

UNITS 3

1 INTRODUCTION 4

2 SYSTEM DESIGN & PROJECT EXECUTION 5

2.1 DEVELOPMENT PHASES 5
2.2 CONTRACTUAL ARRANGEMENTS 6
2.3 DESIGNING A SYSTEM 7
2.4 TESTING 9
2.5 FINAL DESIGN DOCUMENTATION 10
2.6 PHASES OF A PROJECT 11

3 SEAWATER SYSTEM PH 14

3.1 SYSTEM DESCRIPTION 14
3.1.1 LP System *14*
3.1.2 HP System *15*
3.2 EQUIPMENT DESCRIPTION 16
3.2.1 LP Pump *16*
3.2.2 HP Pump *19*
3.2.3 Seawater Coarse Filter *23*
3.2.4 Electro Chlorination Generator *24*
3.3 POTENTIAL ROOT CAUSES 25
3.3.1 Water hammer (Surge) *25*
3.3.2 Pulsation *25*
3.3.3 Vibration *25*

4 PERFORMANCE TEST OF THE SEAWATER SYSTEMS 28

4.1 LP SEAWATER SYSTEM 28
4.1.1 LP Seawater Lift Pumps (84-PX-9101A/B) *29*
4.1.2 LP Seawater Lift Pump Changeover and Trip Test *31*
4.1.3 LP Seawater Coarse Filter *32*
4.1.4 Final tuning of LP seawater distribution system *33*
4.2 HP SEAWATER SYSTEM 33
4.2.1 HP Seawater Lift Pumps (84-PX-9102A/B) *34*
4.2.2 HP Seawater Lift Pump Changeover and Trip Test *36*
4.2.3 HP Seawater Coarse Filter *36*
4.2.4 Electro Chlorination Generation *37*
4.2.5 Final tuning of HP seawater distribution system *38*

5 PERFORMANCE TEST ROTATIONAL EQUIPMENT 39

5.1 COOLING MEDIUM PUMPS (45-PA-9106A/B) 39
5.2 FIREWATER PUMPS (48-XD-9107A/B) 40
5.3 OIL BOOSTER PUMPS (11-PA-9101A/B) 41
5.4 OIL EXPORT PUMPS (11-PA-9102A/B) 42
5.5 1ST STAGE GAS COMPRESSOR (23-KA-9101) 43
5.6 2ND STAGE GAS COMPRESSOR (23-KA-9102) 44
5.7 3RD STAGE GAS COMPRESSOR (23-KA-9103) 45
5.8 4TH STAGE GAS COMPRESSOR (27-KA-9104) 47

6 CALCULATION **49**
7 DISCUSSION **51**
8 CONCLUSION **53**
REFERENCES **54**
TEST SHEETS **55**
APPENDICES: **64**

List of Figures

FIG. 2.6.1 THE PROJECT PHASES 13
FIG. 3.2.1.1 EUREKA LINESHAFT DEEPWELL PUMP 16
FIG. 3.2.1.2 PUMP CHARACTERISTIC 84-PX-9101A/B 17
FIG. 3.2.2.1 FRANK MOHN ESP 19
FIG. 3.2.2.2 PUMP CHARACTERISTIC 84-PX-9102A/B 20
FIG. 3.2.2.3 PUMP CHARACTERISTIC 84-PX-9102A/B 21
FIG. 3.2.3.1 NORMAL FILTRATION PHASE FIG. 3.2.3.2 BACKFLUSHING PHASE 23
FIG. 3.3.3 VIBRATION MOTION (SINE WAVE) 26

List of Tables

TABLE 2.1.1 PROJECT DEVELOPMENT PHASES 5
TABLE 3.2.1.1 PERFORMANCE DIAGRAM 84-PX-9101A/B 17
TABLE 3.2.1.2 RATED POINT 84-PX-9101A/B 17
TABLE 3.2.1.3 MAINTENANCE PROGRAM FOR LP SEAWATER LIFT PUMPS (84-PX-9101A/B) 18
TABLE 3.2.2.1 PERFORMANCE DIAGRAM 84-PX-9102A/B 20
TABLE 3.2.2.2 RATED POINT 84-PX-9102A/B 20
TABLE 3.2.2.3 MAINTENANCE PROGRAM FOR HP SEAWATER LIFT PUMPS (84-PX-9102A/B) 22
TABLE 6.1 TUNING PARAMETRS 84-FIC-93294 55
TABLE 6.2 TUNING PARAMETRS 84-TIC-93286A 55
TABLE 6.3 TUNING PARAMETRS 84-TIC-93286B 55
TABLE 6.4 LP SEAWATER LIFT PUMP A 56
TABLE 6.5 LP SEAWATER LIFT PUMP B 56
TABLE 6.6 TUNING PARAMETRS 84-FIC-93233 57
TABLE 6.7 TUNING PARAMETRS 84-TIC-91771A 57
TABLE 6.8 TUNING PARAMETRS 84-TIC-91771B 57
TABLE 6.9 HP SEAWATER LIFT PUMP A 57
TABLE 6.10 HP SEAWATER LIFT PUMP B 57
TABLE 6.11 COOLING MEDIUM CIRCULATION PUMP A 58
TABLE 6.12 COOLING MEDIUM CIRCULATION PUMP B 58
TABLE 6.13 FIREWATER PUMP A 58
TABLE 6.14 FIREWATER PUMP B 58
TABLE 6.15 OIL BOOSTER PUMP A 59
TABLE 6.16 OIL BOOSTER PUMP B 59
TABLE 6.17 OIL EXPORT PUMP A 59
TABLE 6.18 OIL EXPORT PUMP B 60
TABLE 6.19 1ST STAGE GAS COMPRESSOR 60
TABLE 6.20 2ND STAGE GAS COMPRESSOR 61
TABLE 6.21 3RD STAGE GAS COMPRESSOR 62
TABLE 6.22 4TH STAGE GAS COMPRESSOR 63

Definitions

VRD	Valhall Re-Development
PH	Process and Hotel
LQ	Living Quarter
ESP	Electrical Submersible Pump
WP	Wellhead Platform
VFN	Valhall Flank North
UCP	Unit Control Panel
FAT	Factory Acceptance Test
LP	Low Pressure
mlc	meter liquid column
LAT	Lowest Astronomical Tide
IGBT	Insulated Gate Bipolar Transistors
PCS	Process Control System
PCP	Production & Compressor Platform
PDO	Plan for Development and Operation
Bara	Absolute pressure over a perfect vacuum
Barg	Pressure over atmospheric pressure at sea level
HVAC	Heating, Ventilation and Air Conditioning
PFS	Power From Shore
VSD	Variable Speed Drive
QP	Quarter Platform
IP	Injection Platform
DP	Drilling Platform
VFS	Valhall Flank South
CCP	Compressor Control Panel
ASC	Anti-Surge Control
HP	High Pressure
SPM	Shock Pulse Method
RMS	Root Mean Square
AHU	Air Handling Unit

Units

$A = Area\ [m^2]$

$Q = Flow\ [m^3/h],\ [m^3/s]$

$H_d = Dynamic\ head\ [mlc]$

$\rho = Density\ [kg/m^3]$

$\nu = Kinematic\ viscosity\ [m^2 \cdot s^{-1}]$

$\Delta p = Differential\ pressure\ [Pa]$

$\varepsilon = Friction\ factor\ [-]$

$d = Diameter\ [m],\ [mm]$

$Re = Reynolds\ number\ [-]$

$R = Universal\ gas\ constant,\ 8{,}314 \frac{kJ \cdot m}{kmol \cdot K}$

$T = Absolute\ temperature\ [K]$

$n = Polytropic\ exponent\ [-]$

$C_v = Flow\ coefficient\ [-]$

$H_h = Hydrostatic\ head\ [mlc]$

$H_p = Polytropic\ head\ [kJ/kg]$

$g = Gravity,\ 9{,}81\ m/s^2$

$p = Pressure\ [Pa],\ [kPa]$

$f = Friction\ number\ [-]$

$l = Length\ [m]$

$v = Velocity\ [m/s]$

$w = Weight\ flow\ [kg/h]$

$M = Molar\ weight\ [kg/kmol]$

$Z = Compressibility\ factor\ [-]$

$" = Inch,\ 25{,}4\ mm$

1 Introduction

In Scandinavian mythology Valhall is described as a majestic, enormous hall of celebration in the mighty castle of Åsgard, ruled over by the great god Odin.
Valhall is also a name of one of the most significant oil and gas fields on the Norwegian shelf located in the southern corner, block 2/8.
The field has been producing oil and gas since the start-up in 1982. With three original platforms, one living quarter (QP), one drilling platform (DP) and one process and compressor platform (PCP), the field was first expanded in 1996 with one wellhead platform (WP).
The year of 2004 was a big year of expansion at Valhall, with three more platforms tied in to the original field centre, two un-manned flank platforms; flank south (VFN) and flank north (VFN), and one combined drilling and water injection platform (IP). Other tiebacks to the Valhall-complex are the un-manned Hod-field that was started up in the year of 1990.

The first estimates for the oil reservoir at Valhall was set to 247 million barrels of oil, by the end of 2004 the field had almost produced 600 million barrels of oil. With 450 million barrels still to go and an aging facility, the Valhall field needed to be upgraded. It was therefore decided to develop a new field centre that could process oil and gas until 2050. The main component would be a new combined process and living quarter platform (PH), which would phase out two of the existing platforms, PCP and QP, and in time DP.
The project, called VRD, started right after the decision was made in 2005. Big contracts were awarded to Wood Group, and their subsidiary company Mustang Engineering in Houston, for detail engineering of PH. Fabricom Stavanger would design the medications required to the existing Brownfield platforms whilst Aker Solutions would carry out the offshore construction. Heerema earned the contract for construction of the main deck, while SLP Engineering constructed the accommodation unit at their premises in Lowestoft, England.
The new platform, PH, is planned to be installed in July 2010, and will start processing oil and gas in second quarter of 2011.
In relation to the new process module a lot of equipment is installed from many different suppliers. The main objective for this thesis is to quality assure that BP Norway, as the purchaser, is getting the products they have paid for and that they are working according to the specifications and guarantees. This means to outline a program on how to test the performance of systems and different equipment. The main systems selected for this thesis is the HP and LP seawater systems, where a total description will be given along with equipment data and operational modus.
The thesis will also describe the formatives on how to design a new system from the beginning to the end. Enlightened issues in this matter are selection of contracts, testing procedures, quality assurance, design documentation etc.

2 System Design & Project Execution

2.1 Development phases

In the petroleum industry there are many players and roles, some companies are running the production of an oil field while other companies just have partner interests. Other companies again have their specialization in service, by providing the oil companies with products and services.
When an oil company has been awarded a field license and decides to develop it, they have to involve a lot of contractors and specialists to help them solve the mystery to a successful production system. The field development project consists of two main phases, called development planning and project execution.
The planning phase involves concept screening, feasibility studies and concept engineering. Concept screening takes care of the exploration part, while the feasibility studies are evolved around creating a PDO (Plan for Development and Operation) and getting it approved by the authorities and partners. When forming a PDO it is always focused on finding the best all round solution associated with commercial potential and safety, and environmental evaluations.
When the PDO is approved, which is part of the development planning, the conceptual engineering is started based on the recommendations of the PDO (Odland, 2000).
The conceptual engineering consists of:

- Final development concept (engineering basis)
- Operation and maintenance philosophy
- Safety and environmental programs
- Requirements to materials and standardization
- Master schedules and cost control estimates
- Procurement and contract philosophy

During the conceptual engineering phase the engineering basis, called Master Control Schedule, is being defined and held as a basis for technical changes in the project. Along with the Master Control Estimate, the technical concept of the project is being supported and activities and milestones are being defined.
To help out organizing schedules, resource plans, cost estimations and status reports, many projects implement a data tool called Work Breakdown Structure. This is a program that brakes down the scope of works in a hierarchy, with the work packages at the lowest level.

↓ License Award			↓ Issue PDO	↓ Start-up
Development Planning			**Project Execution**	**Operation**
Exploration (screening)	Project development (feasibility)	Conceptual engineering	Detail Engineering Procurement Construction Commissioning	Operate Maintain
			Preparation for operation	

TABLE 2.1.1 PROJECT DEVELOPMENT PHASES

The execution phase is where the detail engineering takes place, along with designing, procurement, fabrication and installation of the various systems.

2.2 Contractual Arrangements

When a company decides to invest in a particular development, there can be many parties involved. For most oil fields today this can be a difficult decision as there may be several oil companies having interests and also the government has to agree.

Procurement selection: Procurement is the acquisition of goods and/or services at the best possible total cost of ownership, in the right quantity and quality, at the right time, in the right place for the direct benefit or use of governments, corporations, or individuals, generally via a contract (Odland, 2000).
This means that a company that wants to invest in an item of equipment or supply of service has to choose a contractor to supply the goods/services, unless the company is capable of producing the goods/services themselves. Procurement is normally dealt with through a contract, where the two parties have to agree on the terms and rights. A simple procurement deal could be just to buy single item of equipment, while complex procurements could involve finding long-term partners, or even 'co-destiny' suppliers that might fundamentally commit one organization to another.
When the operator of a new development finally gets the go ahead to invest, there are several types of contractual arrangements to choose between. This is especially true when developing an offshore field development project. Different contracts that has to be considered are:

E: Engineering, where an engineering contractor is hired. This contractor has got technical, scientific and mathematical skills, to acquire, apply, design and implement a system in a safe and desired way. This includes how the system is being shaped and what kind of equipment that is needed to make sure the system work as desired.
EP: Engineering and Procurement, where a contractor is hired to perform the engineering and procurement. The company now has responsibility to gather all the equipment that is needed through sub contractors. This could be components in a system, like pumps, compressors, valves, instrumentation etc.
EPC: Engineering, Procurement and Construction. Together with engineering and procurement, the contractor also has the responsibility for construction of the system.
This includes the building and assembling of all the sub systems. The major operation in this phase is to assemble all the pipes, cables and instruments, and all the major fundamental structures.
EPCI: Engineering, Procurement, Construction and Installation. Includes every phase of the delivery of a technical system, even the installation part where the system is being hooked up against live systems at the site where it will be operated.
Turnkey: Everything above + Commissioning. In this contract the contractor handles everything including the commissioning phase of the system. This is where the system is being tested according to the requirements and objectives that the purchaser has set. After the commissioning phase the system is handed over to the client company's Operations team and the purchaser has then received the complete product.

Other types of contracts might be put together by the joint venture-principles, where two or more companies are cooperating with each other. The key in these types of contracts is that the involved parties are benefiting from another by shearing the risk, costs and of course rewards.

2.3 Designing a system

The designer's approach to design a system is basically the same as designing one single component or a subsystem (Misra, 2008). But it differentiates a bit according to the degree on which the task is being carried out. A system is normally being designed on behalf of a customer with desirable objectives and requirements. In a selection process on what types of components are to be chosen, there should always be an evaluation to document the selection of the best technology to the right cost. It is not desirable to install prototypes in new systems because these are products that are not being properly tested and could lead to a lot of problems in operation. However, any process system is unique and is designed from the specification where it is going to be operated. In that case, we might say that every system is in effect a prototype. The difference is that a process system is being designed after the "tailor made" method, where a total quality program is outlined to secure that the product and technology is accurate for the requirements. But, it is very important to separate between equipment prototype and process system prototype.
An example on how a particular item of equipment is designed is listed as follows (Mirsa, 2008):

1. Develop one or more design concepts that satisfy the design objectives.
2. Carry out feasibility analysis for the various design concepts. This is done by using methods like theoretical analysis and simulations, or by experimentation and testing in combination with personal experience.
3. Select one of the design concepts that meet all of the design objectives. Objectives in this matter are reliability, safety and other performance goals. In this process they have to look into the whole system, from the combination down to each single part in the system hierarchy.
4. Prepare preliminary specifications and drawings.
5. Pass on the chosen design for procurement and fabrication of development hardware, to be used in the feasibility and evaluation testing of the hardware.
6. Prepare qualification test requirements, as well as production tests and inspection requirements.
7. Prepare the prototype, and work with the qualification testing and corrective design actions.
8. Prepare the final design of the prototype. This includes reviews of the original design objectives.
9. Review and approve/reject the uncertainties which is bound to the prototype.
10. When the objectives of design and other requirements are approved for manufacturing or fabrication or for the user's disposition, the complete design is to be released.

When the designer has released his prototype there are still a few tasks to perform. Examples of such functions are design-configuration control and design-change control. Design-change control is a tool used for controlling the changes made in a product. This is a request that needs to come under direct control of the top management, because the difficulties this will bring if everyone changed the design into their own matter.
Design-configuration control is more related to control of requirements for each specific product and model type of hardware. In the process of executing the first two phases of the design, we find approaches like feasibility studies and preliminary system design. This is a process every product has to go through and which there are different ways of handling. The most common practice for a design is to do a feasibility study of all the designs.

Then engineers compare the different designs, and choose the best configuration for a further more in depth study. The engineers now have to see which of the designs that would be the best to optimize, which will be executed in the preliminary design by computers.
An ideal process of a design would be to optimize every one of the chosen designs, and then select the one it would be best to proceed with. But because this is a much bigger, and more expensive operation, most companies choose the common practice for system design (Misra, 2008). When the right design is chosen for a system there are three phases of development that has to considered:

Conceptual design is the first phase where the life cycle of the system is being calculated and the foundation for the rest of the phases is being based. The conceptual design evolves from functional definition of the system, based on the requirements from the customer and other needs. This is also where the design criteria for the system are being established. The system design starts with identifying the user's needs and requirements for a fully developed system configuration that is ready for production and delivery for subsequent use. In this process it is very useful to involve the customer into the design team, to solve out deficiencies in present design and to get more specific needs based on experience.
When the needs and requirements are highlighted it is time to identify some possible design approaches, this is done in terms of performance effectiveness, maintenance, logistic support and economical criteria. Based on the results, the best alternative is selected. System specifications are now developed, and a review of the conceptual design is to be undertaken.

Preliminary system design is a step further in the process, where it is being worked with the requirements obtained from the conceptual design phase and breaks it down to subsystem level requirements to develop a system configuration. It is also the phase where the specific requirements for hardware, software, manpower, facilities, logistic support and other related resources through a functional analysis are being identified. This analysis is also used to describe functional interfaces and to identify resources for hardware, software, people, facilities and data, including their interfaces. A system design review is then undertaken to ensure that the requirements are being met, along with the allocation process, the trade-off studies and the selected design approaches are being reviewed towards the initially set of requirements. All the deviations resulting from the review are being recorded and the appropriate necessary corrective measures are being initiated.

Detail design and development is based on the results from the review of the preliminary design phase, and evolves from the system specifications. These are specifications from appropriate design-dependent parameters, technical performance measures and associated design, to criteria for characteristics, subsystems and components. The design requirements are achieved through a requirements allocation process, which identifies the detailed performance and effectiveness parameters for each of the elements in the functional analysis. This could be parameters like input- output factors, metrics etc.
A designer can now decide whether to meet the requirement of an item that is commercially available, or by modifying an already existing commercial item or design, develop and produce a totally new item to meet the specific requirements. The design is being evaluated through the fabrication phase of a prototype, or by using a physical working model. Before the firm design data is released to initiate production and fabrication, a new review is undertaken. A detail design review has objects to establish good "production baseline", and verify the adequacy and producibility of the design. The design is now being re-evaluated

through manufactory methods, schedules and cost, before the product is being "frozen" and sent to testing and for final evaluation.
Design evaluation of a system has the purpose of assessing the requirements of each level of the system hierarchy, in terms of hardware, software, facilities, people and data. The baseline is evaluated against the particular design configuration, and expectations like effectiveness, cost, time, frequency etc. are being assessed. The whole operation is done to meet the customer's expectations and deliver a successful product.

2.4 Testing

During, and after, a design phase it is always desirable to test the system against the requirements. This is done to outline faults and errors in the system, as well as pleasing the authorities and the purchaser by showing the progress. Different tests are being outlined during the design and commissioning phase, all with certain mutuality lineaments. Along with the system there shall always be included a test plan with explanations and guidelines for which test to be carried out. The test plan consists of the following contents:

- The definition and schedule of all test equipment and details of organization, administration and control responsibilities.
- The conditions of test conditions including maintenance and logistic support.
- The description of test plans for each type of testing.
- A description of the formal test phase.
- The description of conditions and provisions for the retest phase. This phase is accomplished when the acceptance criteria from the other phases are reached, and the tests are not successful.
- The test documentation.

A test plan serves as a valuable reference and indicates what is to be accomplished, requirements for the test, schedules for the processing of equipment and material for test support, data collecting and reporting methods etc.
Different tests are outlined during the design phases, all to ensure quality assurance and that the design is progressing in the right direction and goal. In the qualification procedures for new technology relevant examples of tests are (DNV, 2001):

Basic tests, specified to test the material properties to establish the key parameters in the design. Also specified to be part of the quality assurance of supplied subsystems. Examples of basic tests are material properties, dimensional accuracy, contamination level of hydraulic fluids, electrical resistance etc.
Prototype tests are qualification tests of the components and assemblies to verify the functional requirements of a new type of design. These tests are often combined with measurements and numerical analysis to verify the functions. Prototype tests can be carried out in phases including laboratory tests and full service tests, such as in shallow/deep water and with hydrocarbons etc.
FAT (Factory Acceptance Test) is a verification test of the manufacturing and assembly of a system that already has been through a prototype test. This is a test that will outline that the performance of the new system meets the requirements, and is therefore a part of the quality control procedure (quality assurance). "The tests shall verify that the probability for manufacturing and assembly failures is acceptably low" (DNV, 2001).

Typical requirements of equipment, such as a centrifugal pump, could be pump performance tests such as head versus flow, energy consumptions etc. Other parameters a FAT utilizes are level of vibration, bearing temperatures, noise level, leakages etc.
These are some examples of many acceptances criteria the provider has to refer to. To help out with this process, standards are made to help out both provider (when designing) and purchaser (when accepting) in the project phase. Well-known standards are API, ISO and NORSOK. A FAT is performed where it is most practical, normally at providers test-rig or at installation site, in order to reduce damage probability or uncertainty in the product. This is a test where the purchaser of the final product often is participating and witnesses.

Pre and post installation test is outlined during and after the system is being assembled and installed at the facility site, this to confirm the correctness of the installation.

Pilot application represents the first use of the system, and includes start up, functional tests and performance tests. These are advanced tests run to gain more experience of the system, and check out critical operations and complexity associated with this. In this phase it is desirable to test the performance of the equipment, to be sure that the purchaser is getting the product he has paid for. Example of this could again be a centrifugal pump that is being tested for performance according to head versus flow, energy consumptions etc. Also conditioning monitoring parameters are desirable to check to verify that the pump is running according to the set requirements. These tests are much like the tests outlined during the FAT.

A simpler guidance to which tests are to be performed during a design phase is the following hierarchy:

- Material testing
- Component testing
- Sub-assembly testing
- Assembly testing

Another method, called accelerated tests, is used to reduce test time and cost, and is suitable through building a theory model to simulate the desired tests. This method is depending on that the uncertainties is localized and reduced to a minimum.

2.5 Final design documentation

Some of the most important actions of a design operation lie in the documentation. This is written proof of how the system is being designed, including signatures and approvals.
The final design documentation usually includes:

- *Specification:* Performance requirements, specified environmental conditions, system performance goals and specified basic logistics requirements. Examples of this could be limits of CO_2 and NO_x pollution to the air and maximum capacity of equipment (gas compressors, crude oil pumps etc).
- *Drawings:* Coordination drawings, correlation drawings, production drawings, procurement drawings and drawings of special test equipments. For drawings related to a project it is in this context related to “as-built” P&ID’s and “red mark-up” P&ID’s. The term "as-built" is equivalent to "as-is", and is showing the exact condition of the system. “As-built” drawings can be documented either after or during

construction. After the construction phase of a system, a qualified technician collects accurate data to reconstruct the drawings back to "as-built".
During a project phase, when there are frequent changes in the "as-built" P&ID's, the drawings often gets marked with red lines to indicate minor or major adjustments in the system. This is a temporary solution, called "red mark-up", and is updated after the project phase, back to "as-built" P&ID's.

- *Parameters:* Functional parameters with their tolerances, starting at the operational use and going backward towards the supplier. The tolerances are specified such as they may be adjusted after time, for example as a result of equipment degradation. The adjustment tolerances are therefore called "funnels of tolerance", where the small end of the funnel is localized at the start, and the large end is pointing towards the future. Good examples of this could be frequency of condition monitoring samples, where the frequency of sampling in the start-up phase is very frequent and is decreasing after a time with stable conditions.

2.6 Phases of a project

Mechanical completion, Installation and Commissioning:
A technical system is normally manufactured by contractor, and then assembled and tested before it is handed over to the purchaser. Each system has to be commissioned, normally done by a commissioning team localized at the construction or installation site where the system is to be installed. The system has to go through a mechanical completion, installation and commissioning phase before it is ready for start-up. A commissioning manager leads this lather phase, and has the responsibility that every activity and objectives are being reached. The most important tasks are to assemble the systems and to functional test the components involved in the system.
Important tasks and activities in the mechanical completion, installation and commissioning phase are (ISS International, 2006):

- Visual inspections for complete and correct installation.
- Shaft alignment, where the rotational machinery is being balanced to reduce the vibration to a minimum.
- Lube oil flushing, simply flush the pipes to clean out eventual particles.
- Pressure/leak tests, to verify that the pipes, vessels and equipments are able to work with the desired pressure.
- Cabling, draw cables between instrumentation and equipment.
- Electrical commissioning, test the electrical system for function.
- Instrumentation commissioning, verify that the installed instrumentation is functioning.
- Loop testing.
- ESD Functioning test, test that the ESD system is working according to limits.
- Integration into existing site.
- As built P&ID's, update the P&ID such that these are correct.
- Functional/integration tests.
- Off-line equipment test, testing of electronic equipment that is not in direct communication (or under the control of) the main process.
- Management of spares, decide and make a plan for what kind of spare parts that needs to be in stock.

- Certification, make sure that the correct certification has been completed and has the right signatures and stamps.

Start-up phase: Start-up is the point in a project where process fluids, such as hydrocarbons (if applicable), and conditions of the equipment are established with the intent of making a final product/products. The systems are now handed over to the Start-Up Team, led by the Start-Up Manager. This phase includes start-up of the systems and functional testing. Here are some of the most important tasks and responsibilities the Start-Up Manager has before handing over the system to the Operations Team. (ISS International, 2006):

- First year operability requirements. This means stock of parts that might break down during the first year of operation. Examples of typically spare parts relevant for a centrifugal pump could be a gasket, bearings, seals, lube oil etc.
- Start-up procedure. Describing the start-up for each of the systems.
- Plant line-up. Arrange the systems up ready for start-up.
- Mechanical run-in machinery monitoring.
- GC/calorimeter calibration (Only applicable for the petroleum industry, typically involved in gas compressors and metering systems).
- Equipment troubleshooting. To detect faults and errors.
- Control-loop tuning. Verify that every control functions are in place. Typical example of this could be the response of a regulation valve
- ESD wet tests / Blow-down tests (Only applicable for the petroleum industry, typically involved in oil and gas plants).
- Surge-line setting. (Only applicable for installation of centrifugal gas compressors)
- Minimum-flow system functional tests.
- Performance and functional tests as required.
- Support training of operations personnel.
- Plant optimizing and de-bottlenecking. Defining the operational settings for each of the systems, along with the total production.
- Certification.

Operational phase: At the end of a project the systems are handed over to the Operations team that will from this point on operate and maintain the systems in normal operational modus. Typical tasks and responsibilities the Operations team has to follow up we find (ISS International, 2006):

- Pre-operations plan. Outline procedures on how to operate the systems.
- Production reporting.
- Recruit Operation and Maintenance teams. Includes training courses and education of personnel.
- Maintenance routines.
- Accepting of project engineering data.
- Operations support and maintenance contracts.
- Brownfield permit system. Decide which strategy to choose, related to the maintenance activities.
- Provide staff for commissioning and start-up teams.
- Certification.

In Fig. 2.6.1 a simplified project chart is illustrated, containing every of the mentioned phases above along with their submissions and objectives. From the left the main phases are listed up, starting with construction and further on with commissioning, start-up and operation.

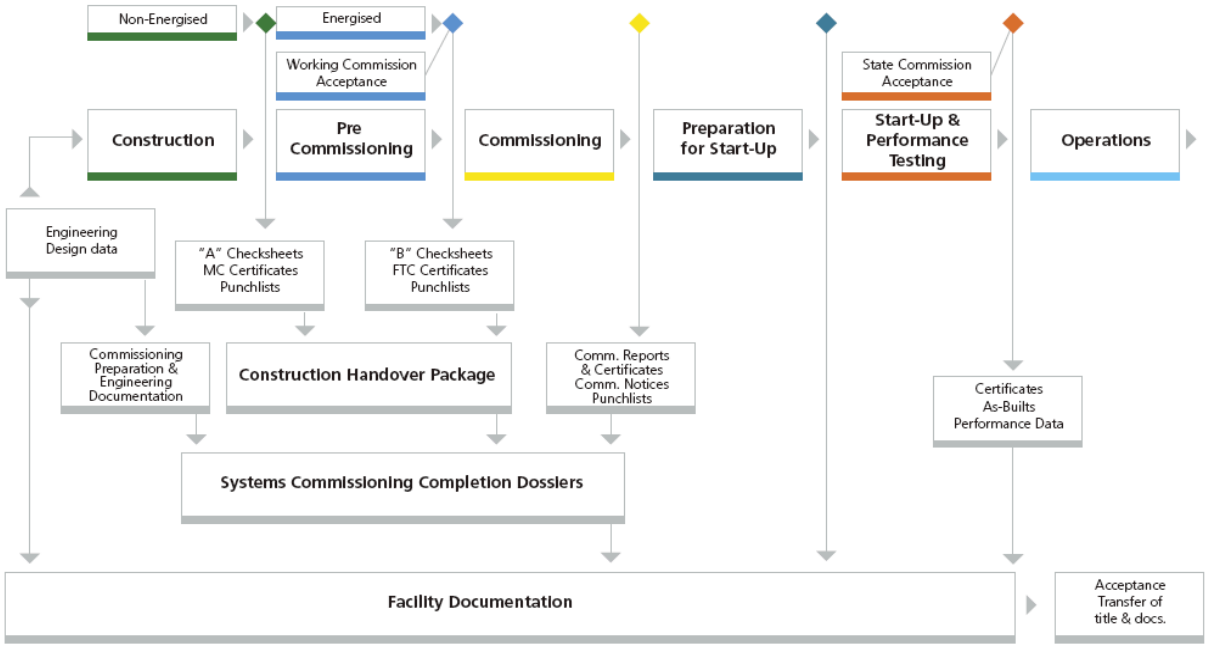

FIG. 2.6.1 THE PROJECT PHASES

3 Seawater system PH

3.1 System description

The chosen seawater system for Valhall PH is split into two separate systems, each with their own working pressure. One LP (Low Pressure) seawater system to provide cooling medium for the cooling medium coolers, and one HP (High Pressure) seawater system to provide cooling medium to a few particular coolers, as well as keeping up the pressure on the firewater ring main, fresh water generation, service water etc.
The pumps for both of the systems are each mounted inside a caisson, which allows the systems to collect seawater at a depth of 50 m below LAT (Lowest Astronomical Tide). From this depth the seawater is transported to the platform by seawater lift pumps, namely two LP pumps and two HP pumps. The reason for this big depth is to ensure that the seawater contains as little organic pollution as possible, even in prolonged periods of the year (Carstensen, 2009).

3.1.1 LP System

In this description, reference is made to the following P&ID's: PH-ME-P-0258-001, PH-ME-P-0259-001 & PH-ME-P-0264-001.
The LP system consists of two LP seawater lift pumps (84-PX-9101A/B), where both of the pumps are designed for 100 % system flow. This means that only one of the pumps is in service at a time, while the other one is in stand-by. The two pumps are identical and are designed to deliver a rated flow of 2400 m^3/h with a discharge pressure of 3,5 barg at the topside. However, the system is designed to handle pressure all the way up to 14 barg, which is the reason why the pumps are a little over dimensioned as will be illustrated in the pump characteristic.
The pumps are called Eureka Lineshaft Deepwell Pump, and are a vertical turbine product lubricated pump that is driven by a dry mounted electrical motor. This means that the flowing seawater is lubricating the bearings and the rotational parts. Each of the pumps is mounted in a caisson, which is injected with hypochlorite and copper to prevent bio fouling.
On the topside, each of the pumps are protected by a minimum-flow valve that will secure a minimum continues flow through each of the pumps. Each of the two pumps is also equipped with a vacuum breaker to help draining the stand-by pump of water. This vacuum breaker also acts as an air release trap during start-ups. The same piece of item is located at the highest point of the seawater distribution manifold.
The pumps are lifting the seawater to the topsides where the flow is first filtrated through a coarse filter (84-CA-9119) to separate out particle contaminants. The reason for this mechanical filtration is to avoid plugging of pipes and heat exchangers. The filter is designed for 100 % flow (2400 m^3/h).
After the seawater is filtered, the flow is distributed to the two cooling medium coolers (45-HB-9101A/B) where the seawater flow receives heat energy from the cooling medium system. These coolers are dimensioned for a flow of 2400 m^3/h each.
The temperature on the cooling medium system is controlled downstream the two coolers, where a temperature controller (84-TIC-93286A/B) is controlling the seawater flow through the coolers.
The LP seawater system is also provided with a flow controller (48-FIC-93294) downstream each of the two coolers. This is a controller that is active in a change over situations between the two coolers. The controller simply measures the total seawater flow through the two

coolers, and ensures that the total flow does not exceed 2400 m^3/h. If the seawater flow should increase over this value, the flow controller will override the temperature control valves and regulate these valves according to the flow.
Downstream the coolers, the seawater is gathered and injected into the LP seawater dump caisson and back to the sea.

3.1.2 HP System

In this description, reference is made to the following P&ID's: PH-ME-P-0259-002, PH-ME-P-0259-003, PH-ME-P-0259-004, PH-ME-P-0259-005 & PH-ME-P-0260-001.
The HP seawater system is provided with two identical ESP's (Electrical Submersible Pump) (84-PX-9102A/B), each designed for 100 % capacity (900 m^3/h) with a discharge pressure of 9,5 barg at the topside.
The pumps are both submerged in a caisson, which is injected with copper and hypochlorite to prevent bio fouling. Each of the pumps is equipped with their own minimum-flow regulation to ensure that the pump always gets a minimum continues flow. They are also equipped with their own vacuum breaker to help drain the stand-by pump of water. This vacuum breaker also functions as an air release trap during start-ups.
The seawater is sucked into the rotating impeller wheel through a suction strainer, and lifted to the surface through the pipe stack. At the topside the seawater flow is first filtered for particles in a coarse filter (84-CA-9129), which is a mechanical filter designed to handle 200 % of the system capacity (1800 m^3/h). After the filter, the seawater flow is distributed to the consumers.
The HP seawater system supplies to two types of consumers, essential and non-essential. The systems classified as essential are those critical for the safety of the PH installation. This system has small bore tubing communication with the firewater ring main, intended to maintain the pressure in the firewater ring main when the firewater pumps are in stand-by mode. In case of an emergency the firewater pumps will start, and there will be a reversed situation where the firewater system provides the flow to the essential users. Two check valves in series control this backflow, preventing the firewater from flowing into the non-essential consumers.

The essential users are:

- Pressure support of the firewater ring main.
- Cooling medium to the VSD (Variable Speed Drive) Cooler (60-HB-9126)
- Cooling medium to essential HVAC (Heating, Ventilation and Air Conditioning) coolers in the LQ
- Cooling medium to the emergency/essential generators on PH

The non-essential consumers are:

- Potable water makers
- Cooling medium to non-essential HVAC coolers in the LQ
- Cooling medium to PFS (Power From Shore) transformation coolers
- Electro chlorination generator
- Utility stations

After the many consumers, the non-essential and essential water is collected and dumped into the HP seawater dump caisson and back to the sea.

3.2 Equipment description

3.2.1 LP Pump

Reference for the following description is taken from Bjørge Eureka's compendium, Eureka Seawater Lift Pumps. Technical literature regarding centrifugal pumps are found in Palgrave, 2003 and Girdhar and Moniz, 2005.
The pumps are provided by Bjørge, called Eureka Lineshaft Deepwell Pump, and are a vertical turbine product lubricated pump which is driven by a dry mounted electrical motor.
The pump is working after the principal of adding kinetic energy to the flowing medium by rotating an impeller wheel(s), and then convert the energy to static pressure in a diffuser. The diffuser increases the flowing area, which decreases the flowing speed. According to Bernoulli's principals where the energy is constant, the static pressure will increase in the flowing medium. The pump unit and the shaft are placed inside a column riser, which is again mounted inside a protection caisson. The pump unit with line shaft and impellers has got a length of 45 m, while the caisson is 85 m deep. To prevent bio fouling hypochlorite and copper are injected to the caisson. The pump unit consists of two impellers, each surrounded by pump bowls which function as diffusers. A strainer is mounted on the suction side of pump unit to prevent inflow of large marine organisms and other substances from the water. The shaft and the pump unit are supported by sleeve bearings between the two stages, lubricated by the flowing seawater. As already mentioned, the line shaft is mounted inside the riser column.
In the flange connections of the many riser column sections there are mounted journal bearings that is supporting the rotating shaft. These are also lubricated by the flowing water.
The axial forces from the impellers is to be taken by a deck head mounted thrust bearing, which is oil/grease lubricated.
The seawater flows into the inlet nozzle through the inlet strainer, and is lifted up the topside by the impeller wheels. At the topside, the seawater flows out of the column riser through a 90 degree discharge bend while the line shaft continues up to the electric motor, placed vertically above the column riser. To prevent an external seawater leakage in the point where the shaft leaves the riser column, it is installed with labyrinth seal.

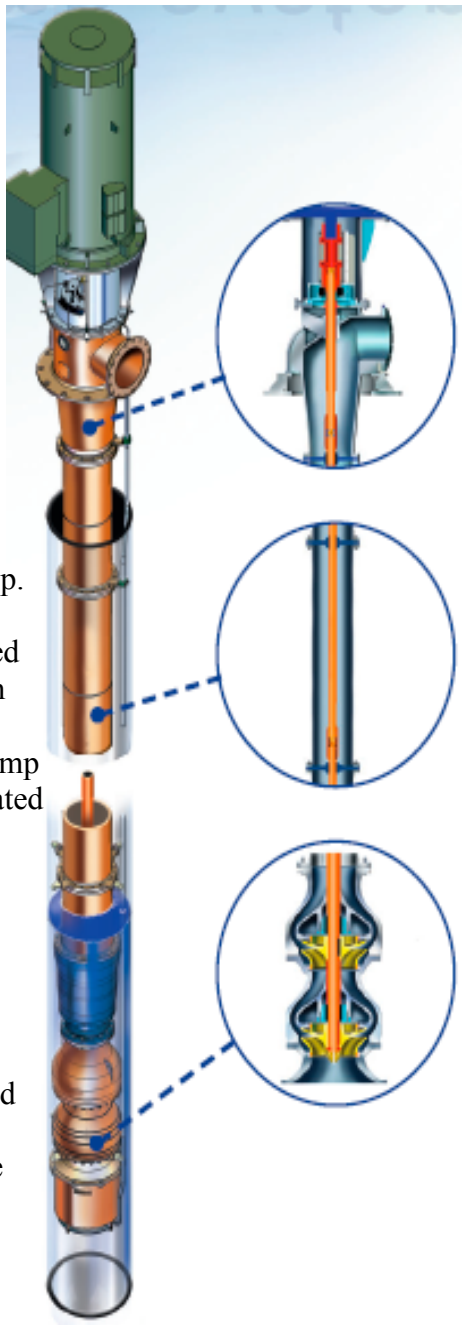

FIG. 3.2.1.1 EUREKA LINESHAFT DEEPWELL PUMP

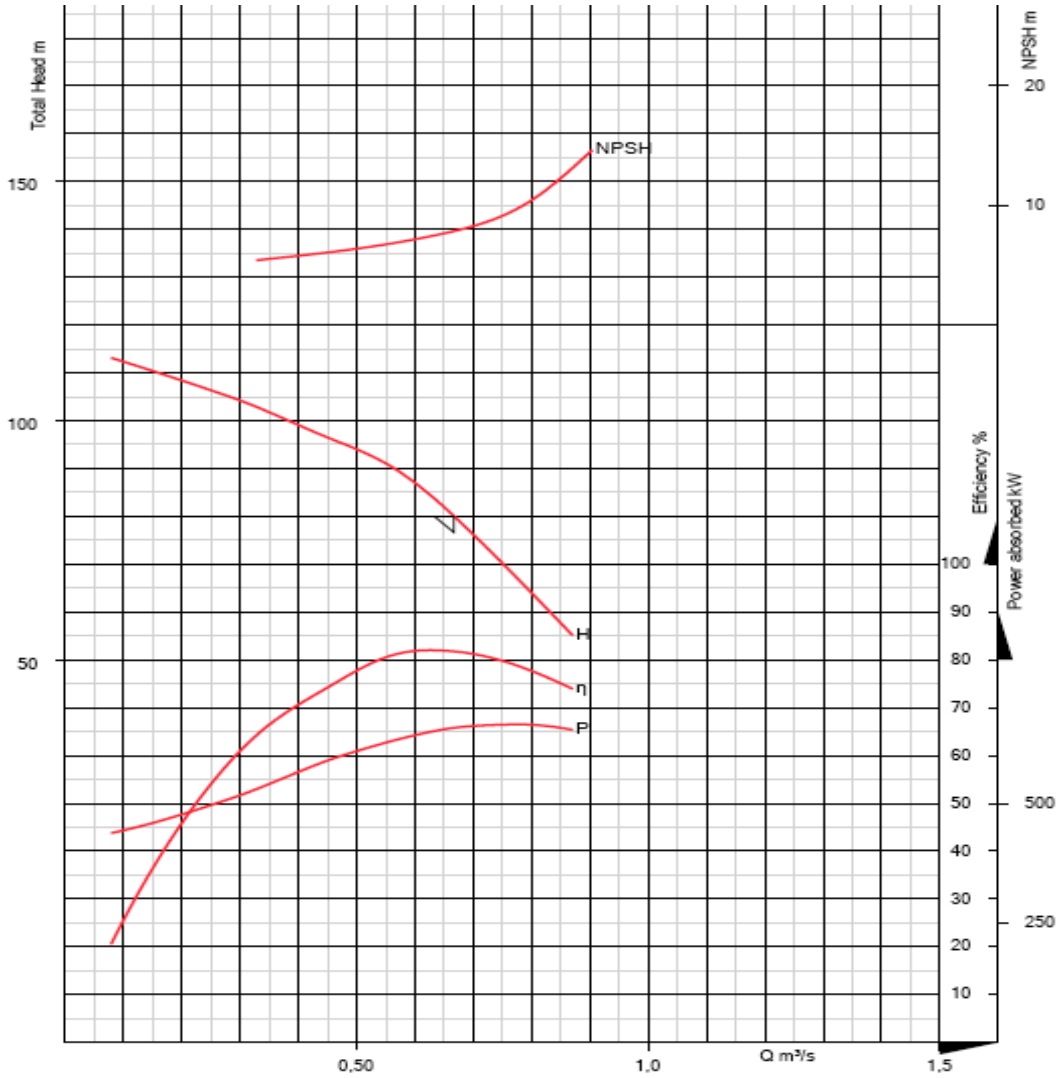

FIG. 3.2.1.2 PUMP CHARACTERISTIC 84-PX-9101A/B

Technical data:

Performance diagram	
Imp. diam: 514.2 mm	**Medium: Seawater**
Speed: 1180 rpm	**Density: 1027 kg/m^3**
Imp. stages: 2	**Visc: 1,0 cSt**
	Temp: 14 deg C

TABLE 3.2.1.1 PERFORMANCE DIAGRAM 84-PX-9101A/B

Rated point	
Flow [m^3/h]	**2400**
Head [mlc]	**80.1**
NPSHr [mlc]	**7.9**
Power [kW]	**657.8**

TABLE 3.2.1.2 RATED POINT 84-PX-9101A/B

Material selection:

As for the material chosen for the LP seawater lift pumps, 25 Cr. Duplex is used for most of the equipment. This includes line shaft, impellers, pump bowl, column pipes, sleeves and wear rings. Reasons for choosing 25 Cr. Duplex, also known as super duplex, is because this is a material with exceptional strength and high corrosion resistance.

Maintenance:

Maintenance regimes vary between start-up and regular operation, because of run in phase and abnormal situation.

However, in normal operation, the provider of the pump, Bjørge AS, is recommending the following maintenance program for the pump:

Maintenance program for LP seawater lift pumps (84-PX-9101A/B)	
Maintenance activity	**Intervals**
Visual inspection when pump is running. Check for bearing temperature, vibration, lube oil supply etc.	Once a month.
Visual inspection when pump is stopped. Check for lube oil leakages.	Annually.
Check for vibration levels on pump and motor bearings. Motor bearings are equipped with SPM-nipple. Vibration level on pump to be checked on pump bearing house. Max level is 5 mm/s in RMS.	Once a month for the first 6 months in operation, every 3rd months after this.
Change oil in pump bearing. Pump bearing to be drained by unscrewing the drain plug at the end of the drainpipe. New oil to be filled trough the filling plug in the bearing cover. Ref doc no PH-26016-R-4800006. (Not in the appendices).	Annually. Plus every time repair work is done, that could have affects on the bearing or oil level.
Check the pump performance, and compare the data against the predicted performance curves given by Bjørge AS. Ref doc no PH-26016-R-4800015. (In the appendices).	Every 2-3 years.
Visual coupling inspection.	Every 2-3 years.
Complete dismantling of pump. Ref installation instruction. Ref doc no PH-26016-K-4800005. (Not in the appendices).	Consider every 10th years.

TABLE 3.2.1.3 MAINTENANCE PROGRAM FOR LP SEAWATER LIFT PUMPS (84-PX-9101A/B)

3.2.2 HP Pump

Reference to the following description is taken from Frank Mohn Flatøy's compendium, Technical Description Electrical Submersible Pump. Technical literature regarding centrifugal pumps are found in Palgrave, 2003 and Girdhar and Moniz, 2005.
The HP seawater lift pumps are called ESP, and are an example of a centrifugal pump with an axial flow, provided by Frank Mohn.
The pump is working after the principal of adding kinetic energy to the flowing medium by rotating an impeller wheel(s),
and then convert the energy to static pressure in a diffuser.
The diffuser increases the flowing area, which decreases the flowing speed. According to Bernoulli's principals where the energy is constant, the static pressure will increase in the flowing medium.
The pump consists of four main parts:

- Pump/Motor unit with end suction.
- Pipe stack with internal electrical power transmission system (riser pipes).
- Top plate arrangement with electrical junction box.
- Oil circulation unit.

The electrical motor is submerged into the seawater where it is provided with electrical power and is rotating the pump head, consisting of one impeller wheel. This wheel takes in the seawater flow through an inlet strainer, before lifting the flow to the topside through the outer shell of the pump house and up the water pipe section of the pipe stack.
The pump is connected to the topside via the pipe stack (47 m), mounted inside a 85 m long caisson. This pipe stack consists of one oil pipe section placed inside a water pipe section.
As mentioned before the water section is leading the seawater to the top side, while the oil pipe is leading non conductive oil down to the pump unit. Inside the oil pipe section it is located three copper conductors which is providing the electrical motor with power. Inside this section we also find a return line for the oil, leading the oil back to the topside. Reasons for supplying oil to the pump unit are:

- Lubricate the mechanical seals and the bearing system.
- Cool the electrical motor.
- Keep an overpressure in the oil pipe section, to avoid seawater inflow to the electrical conductors.
- Electrical insulation condition monitoring.

FIG. 3.2.2.1 FRANK MOHN ESP

The pump/motor unit is supported through the pipe stack, with a roller bearing for radial support on the non-drive end, and a combined radial and thrust bearing on the drive end.
The seal system protects the electrical motor against inflow of seawater, and consists of a mechanical seal riding on a sleeve. The spring, forcing the seal rings towards each other is placed inside the electrical motor casing, so that sealing plates are lubricated and cooled by the forced oil circulation system.

On the topside, the water section of the pipe stack is going out through a 90 degree bend, while the power conductor is going further up to the top plate arrangement where the junction box is located. In this box the electric power supply is placed, as well as the adapters for the pressure and return side of circulation oil.
The utility system associated with the pump, is the oil circulation unit. It consists of an atmospheric oil reservoir, a positive displacement pump to keep up the pressure on the circulation loop, an accumulator, a closed circulation loop and a pump to circulate the oil from the pressure side and back to the return side. The positive displacement pump is installed to compensate for the small loss of circulation oil through the mechanical seal.

Technical data:

Performance diagram	
Imp. diam: 575 mm	**Medium:** Seawater
Speed: 1780 rpm	**Density:** 1030 kg/m^3
Imp. stages: 1	**Visc:** 1,2 cSt
	Temp: 14 deg C

TABLE 3.2.2.1 PERFORMANCE DIAGRAM 84-PX-9102A/B

Rated point	
Flow [m^3/h]	**900**
Head [mlc]	**132.1**
NPSHr [mlc]	**14.5**
Power [kW]	**435**

TABLE 3.2.2.2 RATED POINT 84-PX-9102A/B

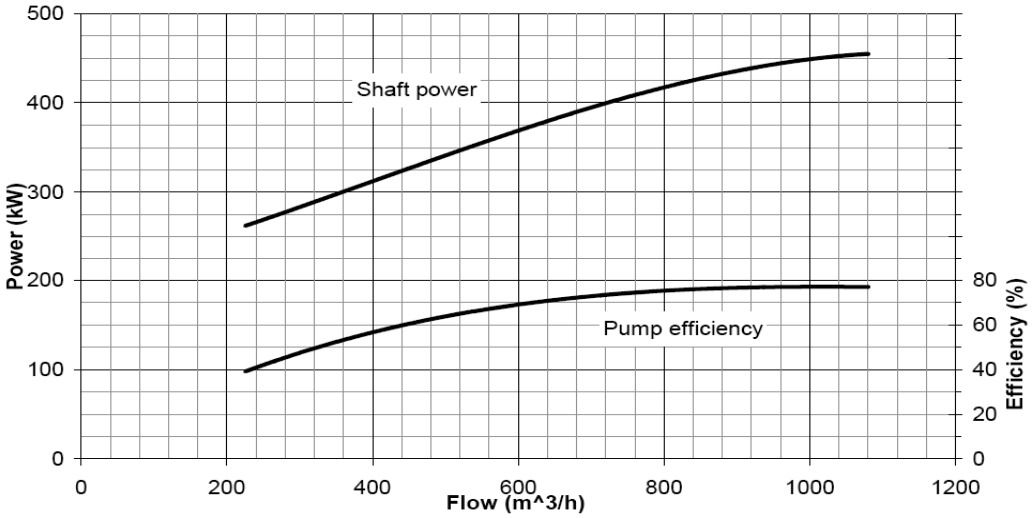

FIG. 3.2.2.2 PUMP CHARACTERISTIC 84-PX-9102A/B

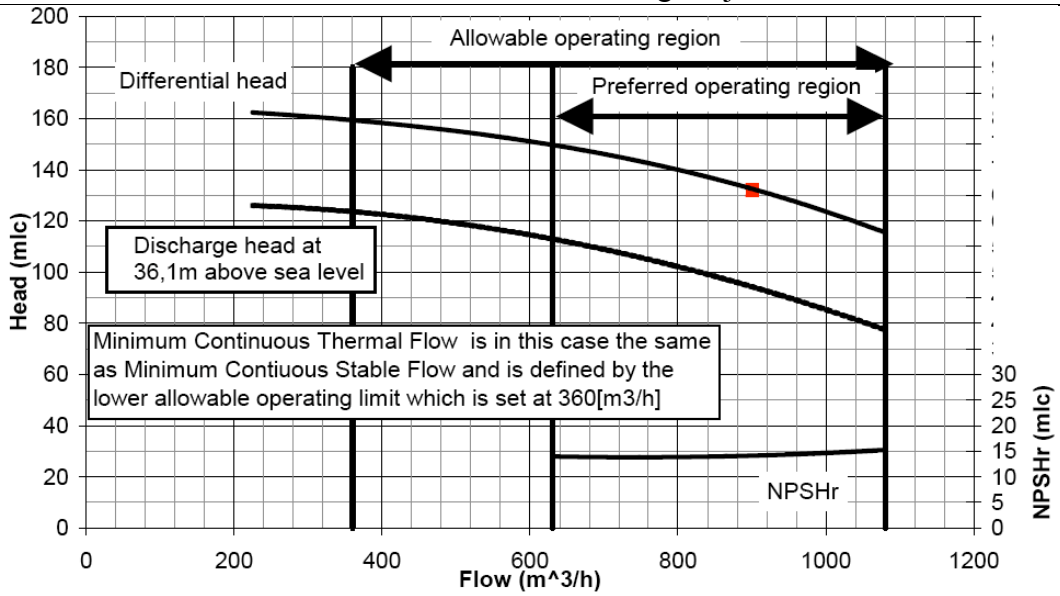

FIG. 3.2.2.3 PUMP CHARACTERISTIC 84-PX-9102A/B

Material selection:

As for the material chosen for the HP seawater lift pumps, 25 Cr. Duplex is used for most of the equipment. This includes pump/motor casing, impeller and pipe stack with sleeves, studs and nuts. The shaft between the motor and the impeller is made of 32CrNiMo6, while the caisson is made of carbon steel.

Reasons for choosing 25 Cr. Duplex, also called super duplex, for the seawater system is that this is a material with exceptional strength and high corrosion resistance.

Maintenance:

Maintenance regimes vary between start-up and regular operation, because of run in phase and abnormal situation.

However, in normal operation, the provider of the pump, Frank Mohn, is recommending the following maintenance program for the pump:

Maintenance program for HP seawater lift pumps (84-PX-9102A/B)	
Maintenance activity	**Intervals**
Check for functionality of air release trap.	Annually.
Check the ambient conditions (air circulation, humidity) and seal integrity of the process connections. Also check cable connectors and cover screws, functional reliability of the voltage supply, the grounds and the lightening protection.	Annually.
Check the pump performance, and compare the data against the predicted performance curves given by Frank Mohn. Ref doc no PH-14034-R-4710023. (In the appendices)	Annually.
Perform particle counting and water analysis of circulation oil.	Once a month.
Take full oil analysis. The oil is to be replaced if the viscosity or if the oxidation stabilizing elements are below minimum limits.	Annually, and after major overhaul and maintenance.
Drain the oil circulation tank for condensation of water.	Once a month.
Change oil filter elements.	Once a year in operation, or if the

	differential pressure is too high by pop-up indicator. Also if it is too large particle containments in the circulation oil.
Measure the consummation of circulation oil. This to give a figure of the mechanical seal leakage.	Continually.
Change the air breather.	If air breather with silica gel is installed, change when the color changes. If water block breather is installed, change annually.
Check pre-charge pressure on the accumulator.	Annually.
Major maintenance, requiring retrieval of the electric submerged pump and full inspection with replacement. This is a program the service engineer from Frank Mohn is called out to do.	Every 5th year, 40 000 running hours or upon failures.

TABLE 3.2.2.3 MAINTENANCE PROGRAM FOR HP SEAWATER LIFT PUMPS (84-PX-9102A/B)

3.2.3 Seawater Coarse Filter

The seawater coarse filters for both the LP and HP seawater systems are provided by GFSA. The filters consist of a large number of standing wedge wire filters, which are open at both ends. A housing made of titanium surrounds the filter assembly. Each of the wedge wire filters has got a filter mesh, designed to filter out every particle above 500 µm ($5x10^{-4}$ m)
The normal flow through the filter is guided into the filter from both ends, and then forced to flow through the wedge wire filter on the way out. By this, the particle contaminants will end up in the inner face of the filter elements.
The filters are designed to provide their own backflushing sequence. This regeneration sequence consists of an electrical motor that rotates a backflushing-arm assembly and a control valve that opens a dump line to the seawater dump caissons.
The backflushing-arm assembly is designed in the way that the wedge wire filter is closed off and sealed at both ends, the assembly now opens a path to the drain system in sequence with opening the control valve. Because of the differential pressure, the already filtrated water will now be forced into the dirty wedge wire filter, with a high velocity going in the opposite direction of the normal path. The wedge wire filter is now being backflushed, and the particle lying in the inner face of the filter elements are being flushed away.
This regeneration operation can be controlled by a timer or by a differential pressure measure over the filter, as well as manually.

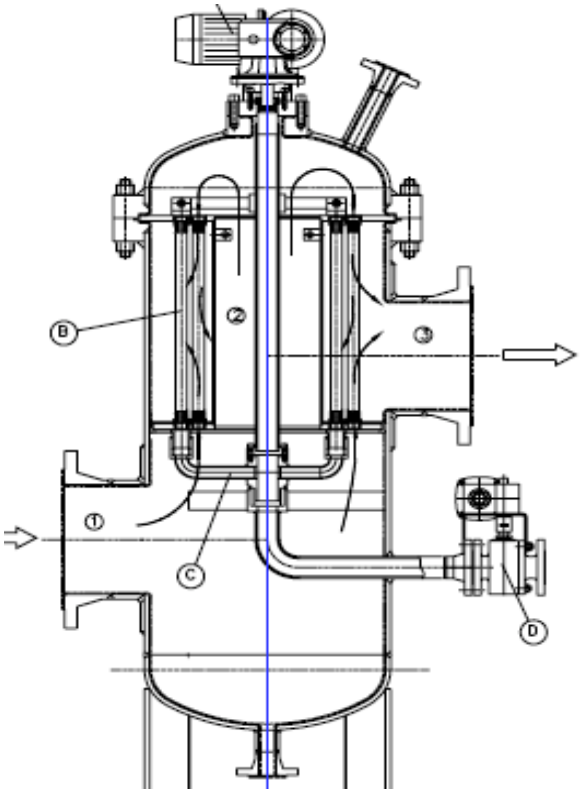

FIG. 3.2.3.1 NORMAL FILTRATION PHASE

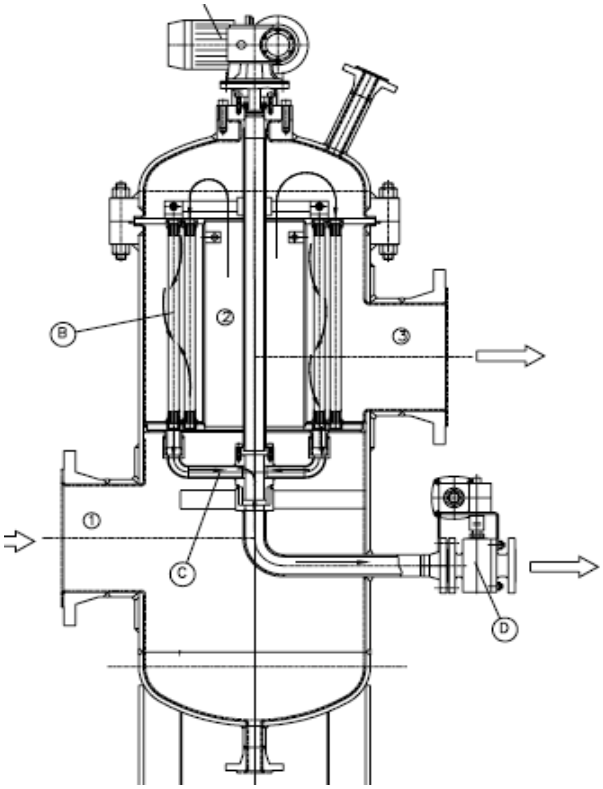

FIG. 3.2.3.2 BACKFLUSHING PHASE

3.2.4 Electro Chlorination Generator

The electro chlorinator generator is supplied to prevent bio fouling on the seawater lift pumps and associated piping systems and filter. The purpose of this generator is to take a small amount of the seawater flow and use this to generate sodium hypochlorite and free copper ions, which are later injected to the seawater caissons.
The process of making sodium hypochlorite and copper ions is done in two different electrolysis processes, which are designed to dose a seawater flow of 4200 m^3/h.
First the seawater flow is split in two, regulating 25 m^3/h through the copper-adding vessel and 0,6 m^3/h through the electro chlorination cell.
The copper-adding vessel consists of one copper anode to which an alternating current is applied. The copper anode will function as a positive pole (anode) and the surrounding vessel will function as a negative pole (cathode), resulting in oxidation of the copper element. The copper ions will therefore be released into the seawater flow. This means that the copper anode is consumed over time, and has to be replaced.
The reaction will be:

$$Cu_2 \rightarrow 2Cu^+ + 2e^-$$

The electro chlorination cell consists of one anode chamber, where the positive electrode is located, and one cathode chamber where the negative electrode is located. The electro chlorination panel now puts a direct current through the electrolyte, sending electrons through the seawater, from the anode to the cathode. By this process, the molecules in the seawater attempt to reach their original elements. Two reactions will occur; the anode will attract the negative charged ions while the cathode will attract the positive charged ions. At the cathode, the ions are receiving electrons while the ions are giving off electrons at the anode.
At the anode:

$$2Cl^- \rightarrow Cl_2 + 2e^-$$

At the cathode:

$$2Na^+ + 2H_2O \rightarrow 2Na^+ + 2OH^- + H_2 + 2e^-$$

The elements resulting from the electrolysis is now separated in the two chambers, but is soon to be mixed together again and new chemical reactions will occur.
The total reaction will then be:

$$Cl_2 + 2Na^+ + 2OH^- \rightarrow 2NaOCl + H_2O$$

This is the reaction where the sodium hypochlorite is being made.
This is then mixed in with the rest of the seawater not participating in the reaction, and is later injected to the seawater caissons along with the flow coming from the copper-adding vessel.

3.3 Potential Root Causes

3.3.1 Water hammer (Surge)

A common problem encountered in seawater systems is surge, or water hammer. This is a phenomenon that occurs due to a sudden change in the liquid velocity. Water hammer usually occurs when a transfer system is quickly started, stopped or is forced to make a rapid change in direction (Sharp and Sharp, 1996). A typical system which is exposed to this, such as a seawater system, often consists of quick closing valves, lots of vertical pipe runs and large pumps with high flow rate. The danger with this phenomenon is extremely high pressure peaks, up to as much as 5 times the system working pressure, which can result in blown diaphragms, ruptured discs, seals and gaskets, as well as burst pipes.
Water is an incompressible medium meaning that every input of energy is transmitted instantly. When a sudden change occurs in a system, as a force like a quick opening valve or a pump start, the energy becomes dynamic and will result in a high velocity change in the medium. This sudden change in velocity will result in a high acoustic sound in the system, causing a pressure spike. This acoustic sound will rapidly accelerate to the speed of sound (in liquid), causing the pressure spike (Webb, Gould and Hardie, 1978).
A way to prevent water hammering is to install a pulsation dampener. This is a tank that is connected to the water system, which is equipped with a gas volume on top to be compressed when the water pressure increases. Gas is a compressible medium and will therefore decrease in volume when the water pressure increases.
Another way to prevent water hammer is install actuators that are acting with slow movements, such that valves are not suddenly closing or opening.

3.3.2 Pulsation

Much like surge, a phenomenon called pulsation also exists. Pulsation occurs in a system that produces pulses with high amplitude, typically displacement pumps. This high amplitude pulse occurs when liquid is being accelerated and decelerated (velocity change), as a result of starting/stopping pumps and quick operating of valves. The uncontrolled energy results in pressure spikes.
The common pump used for seawater systems are therefore centrifugal pumps that are normally producing non-damaging high frequency but low-amplitude pulses, but also here it might appear (Sharp and Sharp, 1996).

3.3.3 Vibration

The technical literature in this section is taken from; Eisenmann and Eisenmann, 2005; Hongyun and Hanwei, 2009, where vibration is briefly described.
Historically, vibration has caused a lot of problems for an operational seawater system. One reason for this is that the main drivers for such systems often are pumps of the kind with a dry mounted electrical motor, converting energy down to a submersible impeller wheel via a long shaft. With an incorrect balancing of the pump shaft the shaft will start vibrating, and increase the mechanical wear on the bearings that stabilize the shaft and the rotor. To help us deal with equipment breakdown caused by vibration it is desirable to install vibration sensors to stop minor failures to escalate.
The vibratory motion is measured by finding the amplitude of the dynamic signal. Meaning that large amplitudes are directly related to high level of vibration, again related to a mechanical problem. In general, the amplitude of vibration relates to the size of the vibratory

movement, the speed of the movements, and the force/energy associated with the movement. Amplitude could be defined from a sine wave in the time domain, such in Fig. 3.3.3.

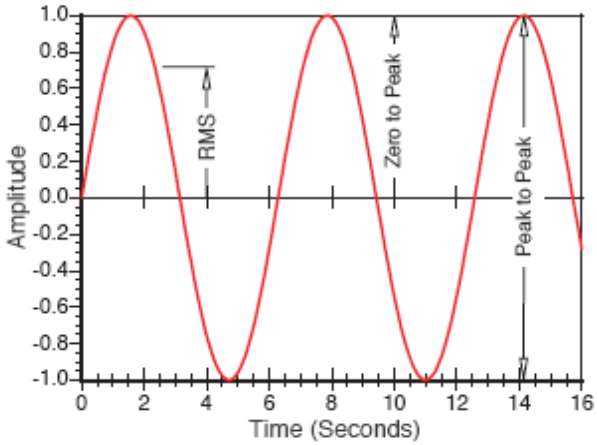

FIG. 3.3.3 VIBRATION MOTION (SINE WAVE)

In this diagram three different types of amplitude measurements are identified. The total magnitude is represented by the peak-to-peak value of the amplitude, and measures from the lowest portion of the dynamic signal (bottom peak) to the highest portion of the signal (top peak). Peak-to-peak amplitude therefore equals to the total signal height, and is an indication of the highest speed achieved.
The zero to peak value represents the middle of the dynamic signal to the highest portion of the signal. For simple voltage signal, the relationship between peak to peak and zero-to-peak could be expressed as: $\text{Amp}_{\text{peak to peak}} = 2 \times \text{Amp}_{\text{zero to peak}}$

RMS (Root Mean Square) is another measure of the amplitude, and is lower than the zero to peak value. For a pure sine wave, the actual amplitude value reduction from zero to peak equals to $2^{0,5}/2$, which gives the numerical value of 0,7071.
This gives these relations to the other amplitude measurements in a voltage signal:

$$\text{Amp}_{\text{rms}} = 0{,}7071 \times \text{Amp}_{\text{zero to peak}}$$
$$\text{Amp}_{\text{rms}} = 0{,}3536 \times \text{Amp}_{\text{peak to peak}}$$

RMS amplitude is an indication of the amount of vibration energy in the machine. The unit used to express RMS is given in mm/s.

There are three different methods of measuring vibration motion:
Displacement sensors, used to measure internal clearances between bearing and shaft, as well as shaft motions. This distance is measured in peak-to-peak difference in the amplitude, means the distance between the positive and negative peak, also known as the magnitude. These are non-contacting transducers that are mounted on a reasonable stationary mechanical structure, observing static and dynamic displacement of the moving machinery.
A typically probe used for measuring displacement is the proximity probe.
The unit for displacement is in ISO standards expressed in µm (10^{-6} m), while it is measured in mils (1^{-6} inch) in the API standards.
Acceleration sensors measure the acceleration of the amplitude by detecting changes in the force resulting from vibration. The most common acceleration transducer is the Piezoelectric Accelerometer, which is a fully contacting probe that is mounted directly on the mechanical element (e.g., bearing housing). The probe consists of a piezoelectric material that produces an electrical charge when being squeezed. This charge is proportional to the force, meaning

that it will increase with increasing motions and vibration. Since the mass is constant, the electrical charge will also be proportional to the acceleration.
Velocity sensors measure the velocity of the amplitude from zero to peak-point. The most used transducer is the Velomitor, which is working after the same principles as the accelerometer. Only difference is that Velomitor measures the speed instead of acceleration.

As for the pumps chosen for the LP and HP seawater systems at PH, vertically suspended centrifugal pumps are selected. For these kinds of pumps it is very important to design it according to API 610, where the pumps are designed with balancing degree. Meaning that the vibration is in relation to the speed of the pump. Also an important issue while selecting pump is to choose a pump with minimum robustness that can handle the environment the pump is set to operate in.
In appendix D, the vibration limits for vertically suspended centrifugal pumps is found. This table is taken from the API 610, standard for centrifugal pumps, and gives vibration limits in peak-to-peak and RMS inside the preferred operating area. The table also shows allowable increase in vibration at flows outside the preferred operating region, inside the allowable operating region.

4 Performance Test of the Seawater Systems

BP, as one of the biggest energy companies' world wide, has many internal objectives and requirements to follow. These are rules outlined through the company's strategy and goals. In BP's internal goals, some key success factors that related to the start-up phase of a facility are found.
Key success factors:

- BP Operations accountable and lead the start-up of facilities. Means that BP run their own start-up strategy, lead by internal personnel that is familiar with BP's requirements.
- Commissioning manager appointed to project in Define. Meaning that the company needs to define the Commissioning Manager of the project.
- Start-Up Manager appointed and small, dedicated Start-Up Team initiated in define.
- Use of start-up execution manual. Means that the project needs to follow BP's "tailor-made" manuals on how to execute a start-up of a facility.
- Rigorous Go/No-go process. This is a common process in BP, means that the company's management needs to approve the phase changes of a project.

There is also outlined a few internal requirements related to a plant performance test.
Plant performance testing:

a. If plant performance tests are required only for internal BP requirements, commissioning and operating authorities shall jointly prepare plant performance test procedures to check that design complies with equipment guarantee points for systems that are critical in achieving rated production.
b. Operating authority should complete performance test procedures within 6 months of start-up.
c. If successful plant performance test form part of contractual delivery by an external design contractor, design engineering contractor should prepare plant performance test procedures based on project SoR.
d. If plant performance is satisfactory, results shall be provided to plant manager for information.
e. If plant performance is unsatisfactory, under BP direction, contractor shall investigate root cause of problem and solve technical issues.

4.1 LP Seawater System

Before the LP seawater system is ready to be tested, the commissioning phase has to be verified and completed. The commissioning phase includes pressure/leak tests as well as functionality tests of the different equipment to be sure that the system will be able to operate after design criteria.
When looking at the whole system, the interfaces also have to be considered along with the subsystems and the start-up sequence. These are systems like electrical- and hydraulic power, PCS (Process Control System), instrument air etc.
Other recommended checks required before start-up, include the line up and general equipment status. It is recommended to go over the entire system, and follow the normal flow path through the system to check that all valves are in correct position for start-up. Use the following P&ID's for going through the system: PH-ME-P-0258-001, PH-ME-P-0259-001 & PH-ME-P-0264-001.

Critical equipment for this system is the vacuum breakers/air release traps and pressure relief valves. Locate these devices and verify that they're correctly installed and NOT blocked.

- 84-PH-S-1000, Air release trap at LP Seawater Lift Pump A.
- 84-PH-S-1001, Air release trap at LP Seawater Lift Pump B.
- 84-PH-S-1011, Air release trap at LP Seawater manifold.
- 84-PH-S-1004, Air release trap downstream Cooling Medium Coolers, placed at the cellar deck.
- 84-PSV-93224A, Relief valve upstream LP Coarse Filter.
- 84-PSV-93291A, Relief valve downstream Cooling Medium Cooler A.
- 84-PSV-93291B, Relief valve downstream Cooling Medium Cooler B.

Before starting with the functionality and performance tests on the different equipment involved in the LP distribution system, there are some main components that have to work.

- Review the flow regulation loop (84-FIC-93294), downstream the cooling medium coolers and record the tuning parameters. The maximum flow through both of the two coolers should not exceed 2400 m^3/h. (Table 6.1)
- Record the tuning parameters for the temperature regulation at the cooling medium coolers, 84-TIC-93286A/B. (Table 6.2/6.3)

When this is verified it is desirable to test each of the main components in the LP seawater distribution systems, starting with the main drivers.

4.1.1 LP Seawater Lift Pumps (84-PX-9101A/B)

The purpose of these tests is to gather pump performance and conditioning monitoring data. Recommended tests for the LP seawater lift pumps:

- Functionality test
- Performance test to verify the pump curves
- Verification of bearing temperatures, winding temperatures and vibration

Method:
Since the minimum-flow valve is dimensioned to handle flow up to 1030 m^3/h (Appendix C), it is recommended to use this line to verify the first two points of the pump characteristic. This is even if the seawater distribution system is in service or not. If the seawater system is in service, it is desirable to start testing the stand-by pump, and then operate both of the pumps simultaneously before changeover and stopping the pump in duty mode to verify the whole length of the pump characteristic of the stand-by pump. The provider of the pump used 1027 kg/m^3 as the seawater density, which is also recommended to use in this test.

Pre-phase:
References relevant for the tests are P&ID's: PH-ME-P-0258-001, PH-ME-P-0107-004 & PH-ME-P-0107-005.
Before the tests are ready to be executed, it is desirable to verify that the instruments used during the tests are in good shape and that correct alarm settings are given. To be sure the data is correct, it is recommended to calibrate the most critical instruments. Local indicators can also be accepted as reference.
Critical instruments are:

- 84-FT-93207A/B. Alarm limits: L=770 m^3/h
- 84-PT-93207A/B. Alarm limits: H=6,8 barg, L=2,8 barg

It is also necessary to verify that the pumps are supplied with electrical power and that the PCS is updated and in service. Instruments necessary for the conditioning monitoring of the pump and the electrical motor needs to be verified correctly installed along with instrumentation and alarm settings.
Following instruments needs to be verified:

- 84-FI-93201A/B. Alarm limits: L=5,5 m^3/h
- 84-YI-95500A/B. Alarm limits: HH=7,1 mm/s, H=4,5 mm/s
- 84-YI-95501A/B. Alarm limits: HH=7,1 mm/s, H=4,5 mm/s
- 84-YI-95510A/B. Alarm limits: HH=8 mm/s, H=5 mm/s
- 84-YI-95511A/B. Alarm limits: HH=8 mm/s, H=5 mm/s
- 84-TI-95500A/B. Alarm limits: HH=120^{o}C, H=110^{o}C
- 84-TI-95502A/B. Alarm limits: HH=145^{o}C, H=135^{o}C
- 84-TI-95505A/B. Alarm limits: HH=145^{o}C, H=135^{o}C
- 84-TI-95508A/B. Alarm limits: HH=145^{o}C, H=135^{o}C
- 84-TI-95511A/B. Alarm limits: HH=120^{o}C, H=110^{o}C

General Procedure:
Use Table 6.4/6.5 to record the data.

- Measure the distance between the cellar deck and the sea level to be sure of the suction pressure of the pump. This is used in the head calculations later. The total length from the submerged pump to the cellar deck is 44,7 m. The distance from the cellar deck to the discharge level is 0,3 m.
- Start testing the stand-by pump. (If the system is in service, if not it's optional).
- Record the relevant XV open/close times and leave the valves in auto.
- Record the tuning parameters of the minimum-flow valve (84-FIC-93207A/B) and leave the flow regulation in auto. Verify that the set point is put to 1400-1500 m^3/h.
- Verify that the lube oil levels are acceptable.
- Start the stand-by pump using the start-up sequence and let it run for 2 hrs to stabilize winding temperatures at the motor, if not recently started.
- Use the minimum-flow valve on manual to regulate the flow. It is recommended to start verifying the left hand side of the pump characteristic. Start by closing the outlet valve (84-XV-93212A/B). Operate the minimum-flow regulation in manual and decrease the flow to 770 m^3/h, verify that the low-flow alarm activates.
  Record the flow and outlet pressure at this point, which will be the first of six desirable points.
  Other desirable recordings are the speed, temperatures and vibrations.
- Visually go over the system to localize abnormal vibrations or leakages. This should be repeated for every flow.
- Make 5 more recordings of flow, outlet pressure, temperatures and vibrations. For flow above 1050 m^3/h the outlet valve (84-XV-93212A/B) needs to be opened, meaning that the distribution system needs to be available. Operate the minimum-flow regulation in manual to help reaching the desirable points.
  Desirable recordings of the flow: 1030, 1600, 2100, 2400, 3100 m^3/h.
  It is recommended to stop the parallel pump when the total flow though the system exceeds 2400 m^3/h.
  2400 m^3/h represent the rated point of the pump; at this point the differential head should be between 78,5 – 84 mlc (meter liquid column), while the power should not exceed 684 kW. This is according to API 610 (appendices E).

3100 m^3/h represents the maximum flow through the pump. However, this flow is above the max capacity of the seawater coarse filter, it is therefore recommended to operate the minimum-flow valve in manual again to achieve the highest flow through the pump.

After the test, the results should be plotted into the original pump characteristic (Fig. 3.2.1.2).

Approximate Duration:
The different tests of one single pump are estimated to take around 3 hrs. This time however, could be reduced if some of the desirable data has been collected during the offshore commissioning phase. These tests can be carried out at any time, also after the system is put in service.

4.1.2 LP Seawater Lift Pump Changeover and Trip Test

The objective for these tests is to verify that changeover between the two pumps is possible when the seawater system is online. The test is desirable to carry out when one of the pumps is in operation. The test requires start-up of the second pump and a simultaneous operation for a while. It is also desirable to test the trip function of each of the pumps at low flow. However, at the writing moment the trip limit is not specified yet. This is something that needs to be implemented before start-up.

General Procedure:

- Verify that the trip limit at low flow is set on both of the pumps.
- Verify that one of the pump is in operation, refer to this pump as the duty pump. Record the flow through the pump:_____m^3/h.
- Start the stand-by pump.
- Let the two pumps run simultaneously for a few minutes.
- Duty pump: Verify that the minimum-flow regulation is in auto, and close the outlet valve (84-XV-93212A/B).
    - Put the minimum-flow regulation in manual, and decrease the flow by closing the minimum-flow valve. It is desirable to decrease the flow to the trip level of the pump.
    - Put the minimum flow-regulation back to auto.
- Record the flow through the stand-by pump:_____m^3/h.
- Start the duty pump again.
- Let the two pumps run simultaneously for a few minutes.
- Stand-by pump: Verify that the minimum-flow regulation is in auto, and close the outlet valve (84-XV-93212A/B).
    - Put the minimum-flow regulation in manual, and decrease the discharge flow by operating the minimum-flow valve. It is desirable to decrease the flow to the trip level of the pump.
    - Put the minimum-flow regulation back to auto.
- When the pressure and flow has stabilized again, the system can be put into normal operation.

Approximate Duration:
The pump changeover and trip test is estimated to take ½ hr, but is depending on what is done during the commissioning phase. The test is able to carry out at any time after the commissioning phase of the system.

4.1.3 LP Seawater Coarse Filter

The purpose of these tests is to verify that the LP seawater coarse filter is properly installed and is functioning after design. It is also desirable to verify the functionality of critical instruments installed in the package.
Before the LP seawater coarse filter is ready to be tested for functionality, it is necessary to have the LP seawater distribution system in operation to have actual flow through the filter.
Desirable tests to carry out are:

- Functionality test of the backflushing sequence
- Verification of essential instrumentation

References relevant for the tests are P&ID: PH-ME-P-0259-001.

General procedure for functionality test of LP seawater coarse filter:

- Verify that the motor (84-CA-9119-M01) is supplied with electrical power, and that the PCS is updated with operational functions.
- Verify that the drain valve (84-XV-93229A) is supplied with electrical power and is acting on demand from the PCS.
- Verify that the differential pressure instrument (84-PDC-93221) is properly installed and is communicating with the PCS.
  Also check that the correct alarm limit is implemented, set at 0,5 barg.
- Put the pressure differential controller (84-PDC-93221) in auto, along with the drain valve (84-XV-93229A).
- Verify that the backflushing sequence is being activated at the set point (0,5 barg), by waiting for the differential pressure to increase or by manipulating the differential pressure from the PCS.

General procedure for verification of essential instrumentation:

- Verify that the following instruments are properly installed and that the PCS is updated with alarm limits.
  - 84-TI-93225.
  - 84-AI-93223. Alarm limits: L=0,2 ppm.
  - 84-PI-93223. Alarm limits: L=2,5 barg.
- Verify that 84-PI-93224, is properly installed and that the PSD is updated with trip limit, LL=2,0 barg. This trip will activate PSD 1 after 60 seconds.
  - Temporarily override the output signal to avoid PSD 1. Block the transmitter and drain it. Verify that the low-low alarm activates. Put the system back to original status.

Approximate Duration:
The different tests corresponding to the LP seawater coarse filter is estimated to take ½ hr, and is suitable to be carried out when ever the LP seawater distribution system is in service.

4.1.4 Final tuning of LP seawater distribution system

When the different tests around the LP seawater distribution system are finished, it is time to do the final tuning around the regulation loops at the cooling medium coolers (45-HB-9101A/B). This involves the flow regulation (84-FIC-93294) and the temperature regulation (84-TIC-93286A/B).
To do this, the LP seawater distribution system has to be in service along with the cooling medium system. Make sure that one of the two coolers is being tuned at a time. Record the final settings in Table 6.1/6.2/6.3.

4.2 HP Seawater System

Before the HP seawater system is ready to be tested, the commissioning phase has to be verified and completed. When looking at the whole system, the interfaces also have to be considered along with the subsystems and the start-up sequence. These are systems like electrical- and hydraulic power, PCS, instrument air etc.
Other devices that it is preferable to check before start-up are the line up of valves and equipment. It is recommended to go over the entire system, and follow the normal flow path through the system to check that all valves are in the correct position for start-up.
Use the following P&ID's for going through the system: PH-ME-P-0259-002, PH-ME-P-0259-003, PH-ME-P-0259-004, PH-ME-P-0259-005, PH-ME-P-0260-001 & PH-LP-P-4353-001.
Critical equipment for this system is the vacuum breakers/air release traps and pressure relief valves. Locate these devices and verify that they're correctly installed and NOT blocked / isolated.

- 84-PH-S-1002, Air release trap at HP Seawater Lift Pump A.
- 84-PH-S-1003, Air release trap at HP Seawater Lift Pump B.
- 84-PH-S-8002, Air release trap upstream IGBT Heat Exchangers.
- 84-PH-S-8003, Air release trap upstream AHU Cooling Coil.
- 84-PH-S-8004, Air release trap downstream AHU Cooling Coil.
- 84-PH-S-8005, Air release trap downstream IGBT Heat Exchangers.
- 84-PSV-93494A, Relief valve upstream HP Coarse Filter.
- 84-PSV-93487 / 84-PSV-93488, Relief valve on the essential users.
- 84-PSV-93237, Relief valve on Emergency Generator Cooler A.
- 84-PSV-93238, Relief valve on Emergency Generator Cooler B.

Before starting with the functionality and performance tests on the different equipment involved in the HP distribution system, there are some main components that have to work.

- Review the temperature regulation loop (84-TIC-93233), downstream the VSD cooler and record the tuning parameters. (Table 6.6)
- Review the temperature regulation loop (84-TIC-91771A/B), downstream the AHU cooling coils and record the tuning parameters. (Table 6.7/6.8)

When this is verified it is desirable to test each of the main components in the HP seawater distribution systems, starting with the main drivers.

4.2.1 HP Seawater Lift Pumps (84-PX-9102A/B)

The HP seawater lift pumps are to be tested after the commissioning phase and initial start-up is completed. This includes start-up of the oil circulation unit, and that the electrical motor is mounted and verified ready for test.
Recommended tests for the HP seawater lift pumps:

- Functionality test of the oil circulation unit
- Functionality test of the pump and electrical motor
- Performance test to verify the pump curves

Method:
If the seawater system is in service, it is desirable to start testing the stand-by pump and operate both of the pumps simultaneously before changeover and stopping the pump in duty mode, to verify the whole length of the pump characteristic of the stand-by pump.
The minimum-flow valve is dimensioned to handle flow up to 380 m^3/h, which is right above the minimum continuous flow through the pump at 360 m^3/h. It is therefore recommended to use this line to verify the first point of the pump characteristic, even if the seawater system is in service or not. The provider of the pump used 1030 kg/m^3 as the seawater density, which is also recommended to use in this test.

Pre-phase:
References relevant for the tests are P&ID's: PH-ME-P-0104-006, PH-ME-P-0259-002, PH-ME-P-0259-003, PH-ME-P-0259-004, PH-ME-P-0259-005, PH-ME-P-0260-001 & PH-LP-P-4353-001.
Before the tests are ready to be executed, it is desirable to verify that the instruments used during the tests are in good shape and suitable for reading the preferred data. To be sure the data is correct, it is therefore recommended to calibrate the most critical instruments. Local indicators can also be accepted as reference.
Critical instruments are:

- 84-FT-93477A/B. L=396 m^3/h.
- 84-PT-93477A/B. H=12,3 barg, L=8,2 barg.
- 84-TT-93477A/B.

It is also necessary to verify that the main motor, and the pressurizing and circulation pumps for the oil circulation unit are supplied with electrical power. The PCS needs to be verified updated and functionality tested.

General Procedure Oil Circulation Unit:

- Check that the following instruments are properly installed and that the PCS is updated with alarm limits:
  - 84-PI-95555A/B. HH=24 barg, H=22 barg, L=12,1 barg, LL=10,1 barg.
  - 84-PIC-95556A/B. Start=16,4 barg, Stop=14,4 barg.
  - 84-FI-95554A/B. L=80 l/min, LL=40 l/min.
  - 84-TI-95553A/B. HH=70°C, H=65°C.
  - 84-PDI-95556A/B. H=2,5 barg.
  - 84-LI-95551A/B. H=82,9 %, L=51,2 %, LL=39,6 %.
- Verify that the circulation oil level is acceptable.
- Review the circulation system and line it up for operation.
- Start the pressurizing pump (84-PS-9101A/B).

- When the pressure has stabilized, start the circulation pump (84-PG-9102A/B).
- Review the system visually, and look for leakages.
- Use the PCS to make trends of the instruments mentioned in the first point. This to verify that the conditions are acceptable before start-up of the submersed pump.

General Procedure Pump/Electrical Motor:

Use Table 6.9/6.10 to record the data.

- Measure the distance between the cellar deck and the sea level to be sure of the suction pressure of the pump. This is used in the head calculations later. The total length from the submerged pump to the cellar deck is 45,5 m. The distance from the cellar deck to the discharge level is 1,1 m.
- Start testing the stand-by pump. (If the system is in service, if not it's optional).
- Measure and record the relevant XV open/close times and leave the valves in auto.
- Record the tuning parameters of the minimum-flow valve (84-FIC-93477A/B) and leave the flow regulation in auto. Verify that the set point is put to 440 m^3/h.
- Start the stand-by pump using the start-up sequence and let it run for 15-20 min to stabilize temperatures, if not recently started.
- Use the minimum-flow valve to regulate the flow. It is recommended to start verifying the left hand side of the pump characteristic. Reduce the flow to the minimum by closing the outlet valve (84-XV-93482A/B). Operate the minimum-flow regulation in manual and decrease the flow to 380 m^3/h, verify that the low-flow alarm activates. Record the flow and outlet pressure at this point, which will be the first of six desirable points.
- Visually go over the system to locate abnormal vibrations or leakages. This should be repeated for every flow.
- For flow above 380 m^3/h the outlet valve (84-XV-93482A/B) needs to be opened, which means the distribution system needs to be available. Operate the minimum-flow regulation in manual to help reach the desirable points.
  Desirable recordings are 380, 650, 800, 900, 1050 m^3/h.
  It is recommended to stop the parallel pump when the total flow though the system exceeds 900 m^3/h.
  900 m^3/h also represent the rated point of the pump; at this point the differential head should be between 129,5 – 139 mlc, while the power should not exceed 452 kW. This is according to API 610 (appendices E).

After the test, the results should be plotted into the original pump characteristic (Fig. 3.2.2.3).

Approximate Duration:

The different tests of one single pump are estimated to take around 1-2 hrs. This time however, could be reduced if some of the desirable data has been collected during the offshore commissioning phase. These tests can be carried out at any time, also after the system is put in service.

4.2.2 HP Seawater Lift Pump Changeover and Trip Test

The objective for this test is to verify that changeover between the two pumps is possible when the seawater system is in service. The test is desirable to carry out when one of the pumps is in operation. The test requires start-up of the second pump and simultaneous operation for a while. It is also desirable to test the trip function at low flow for each of the pumps. However, at the writing moment the trip limit is not specified yet. This is something that needs to be implemented before start-up.

General Procedure:

- Verify that the trip limit at low flow is set on both of the pumps.
- Verify that one of the pump is in operation, refer to this pump as the duty pump. Record the flow through the pump:_____m^3/h.
- Start the stand-by pump.
- Let the two pumps run simultaneously for a few minutes.
- Duty pump: Verify that the minimum-flow regulation is in auto, and close the outlet valve (84-XV-93482A/B).
    - Put the minimum-flow regulation in manual, and decrease the flow by closing the minimum-flow valve. It is desirable to decrease the flow to trip level of the pump.
    - Put the minimum-flow regulation back to auto.
- Record the flow through the stand-by pump:_____m^3/h.
- Start the duty pump again.
- Let the two pumps run simultaneously for a few minutes.
- Stand-by pump: Verify that the minimum-flow regulation is in auto, and close the outlet valve (84-XV-93482A/B).
    - Put the minimum-flow regulation in manual, and decrease the discharge flow by closing the minimum-flow valve. It is desirable to decrease the flow to the trip level of the pump.
    - Put the minimum-flow regulation back to auto.
- When the pressure and flow has stabilized again, the system can be put into normal operation.

Approximate Duration:

The pump changeover and trip test is estimated to take ½ hr, but is depending on what is done during the commissioning phase. The test is able to carry out at any time after the commissioning phase of the system.

4.2.3 HP Seawater Coarse Filter

The purpose of these tests is to verify that the HP seawater coarse filter is properly installed and is functioning after design. It is also desirable to verify the functionality of critical instruments installed in the package.

Before the HP seawater coarse filter is ready to be tested for functionality, it is necessary to have the HP seawater distribution system in operation to have actual flow through the filter. Desirable tests to carry out are:

- Functionality test of the backflushing sequence
- Verification of essential instrumentation

Reference relevant for the test is P&ID: PH-ME-P-0259-005.

General Procedure, Functionality Test:

- Verify that the motor (84-CA-9129-M01) is supplied with electrical power, and that the PCS is updated with operational functions.
- Verify that the drain valve (84-XV-93499A) is supplied with electrical power and is acting on demand from the PCS.
- Verify that the differential pressure instrument (84-PDC-93491) is properly installed and is communicating with the PCS.
  Also check that the correct alarm limit is implemented, set at 0,5 barg.
- Put the pressure differential controller (84-PDC-93491) in auto, along with the drain valve (84-XV-93499A).
- Verify that the backflushing sequence is being activated at the set point (0,5 barg), by waiting for the differential pressure to increase or by manipulating the differential pressure in PCS.

General Procedure, Verification of Essential Instrumentation:

- Verify that the following instruments are properly installed and that the PCS is updated with alarm limits.
  - 84-TI-93495.
  - 84-AI-93493. L=0,2 ppm.
  - 84-PI-93493. L=7,5 bar.
- Verify that 84-PI-93494, is properly installed and that the PSD is updated with trip limit, LL=6,0 bar. This trip will activate PSD 1 after 60 seconds.
  - Temporarily override the output signal to avoid PSD 1. Block the transmitter and drain it. Verify that the low-low alarm activates. Put the system back to original status.

Approximate Duration:
The different tests corresponding to the HP seawater coarse filter is estimated to take ½ hr.

4.2.4 Electro Chlorination Generation

The electro chlorination generation consists of two vessels, the electro chlorination cell and the copper-adding vessel. The purpose of this test is to line these two vessels up in parallel and adjust the flow running through the package. Also the instrumentation and trip function will be function tested. The HP seawater distribution system needs to be in service before starting these tests.
Desirable tests to carry out are:

- Capacity test
- Functionality test

Reference relevant for the test is P&ID: PH-ME-P-0260-001.

General Procedure:

- Verify that 84-PSV-96072 is correctly mounted and is set at 10 barg.
- Verify that the UCP (Unit Control Panel) is correctly mounted and supplied with electrical power.
- Check 84-PCV-96073 for functionality, should be set at 7,5 barg.

- Verify that the following instruments are properly installed and that the PCS is updated with alarm limits:
  - 84-PI-96071. L=6,5 barg.
  - 84-FI-96069. LL=22 m^3/h.
  - 84-FI-96070. LL=0,48 m^3/h.
  - 84-II-96062. L=15 A.
  - 84-EI-96063. H=120 V.
  - 84-II-96064. L=5 A.
  - 84-EI-96065. H=13 V.
- Line the system up ready for operation.
- Verify that the control valves for hypochlorite to the seawater lift pumps in operation are open (84-XV-93472A/B and 84-XV-93202A/B).
- Adjust the flow through the electro chlorinator cell (84-CX-9107) by regulating the outlet valve, 84-V-94004. The flow should be left at 25 m^3/h.
- Adjust the flow through the copper-adding vessel (84-VX-9108) by regulating the outlet valve, 84-V-94006. The flow should be set at 0,6 m^3/h.
- Activate the electro chlorinator generator with 84-HS-96061.
- Adjust the current at the UCP according to the analyzers, 84-AI-93223 on the LP seawater distribution system and 84-AI-93493 on the HP seawater distribution system.
- Distribute the hypochlorite to the two systems by regulating on the valves upstream 84-XV-93202A/B (LP system) and 84-XV-93472A/B (HP system). The flow should be set to 18,5 l/h at the LP system and 7 l/h in the HP system.
- Make the same adjustments for the stand-by pumps.

Approximate Duration:
The test should take about 1 hr to complete, including correct flow adjustment.

4.2.5 Final tuning of HP seawater distribution system

When the different tests around the HP seawater distribution system are finished, it is time to do the final tuning around the temperature regulation loops. This involves the temperature regulation at the VSD cooler (84-TIC-93233) and at the AHU cooling coils (84-TIC-91771A/B). To do this, the HP seawater distribution system has to be in service along with the coolers and containing utility systems. Record the final settings in Table 6.6/6.7/6.8.

5 Performance Test Rotational Equipment

5.1 Cooling Medium Pumps (45-PA-9106A/B)

Before the test is ready to be executed it needs to be verified that the commissioning phase is completed and the LP seawater system is in operation, as well as the cooling medium system is ready for operation. The recycle line is designed to handle a maximum flow of 680 m^3/h, which is also the minimum continuous flow through the pump. The first point to be verified on the flow will therefore be just above 680 m^3/h.
Reference relevant for the test is P&ID: PH-ME-P-0263-001.

General Procedure
Use Table 6.11/6.12 to record the data.

- Take a density sample of the medium and send to lab for analysis.
- Start testing the stand-by pump. (If the system is in service, if not it's optional).
- Measure and record the relevant XV open/close times and leave the valves in auto.
- Record the tuning parameters of the minimum-flow valve (45-FIC-93267A/B) and leave the flow regulation in auto.
- Start the stand-by pump using the start-up sequence and let it run for 15-20 min to stabilize temperatures, if not recently started.
- Use the minimum-flow valve to regulate the flow. It is recommended to start verifying the left hand side of the pump characteristic. Start reducing the flow towards the minimum continuous flow, by regulating the manual outlet valve 45-V-91245/6. The first desirable point will be at 700 m^3/h, verify that the low-flow alarm activates. Record the flow, pressures and temperatures at this point, which will be the first of six points.
- Visually go over the system to look for abnormal vibrations or leakages. This should be repeated for every flow.
- Slowly operate the manual outlet valve again, and increase the flow through the pump. Operate the minimum-flow regulation in manual to help reaching the desirable points. Use the table and record the parameters. Desirable recordings are 1000, 1200, 1550, 1750, 2000 m^3/h. It is recommended to stop the parallel pump when the total flow though the system exceeds 1550 m^3/h.
  1550 m^3/h represent the rated point of the pump; at this point the differential head should be between 73,5 – 79 mlc, while the power should not exceed 213 kW. This is according to API 610 (appendices E).

After the test, the results should be plotted into the original pump characteristic (appendix K).

Approximate Duration:
The different tests of one single pump are estimated to take around 1-2 hrs. This time however, could be reduced if some of the desirable data has been collected during the offshore commissioning phase. These tests can be carried out at any time, also after the system is put in service.

5.2 Firewater Pumps (48-XD-9107A/B)

Before the test is ready to be executed it needs to be verified that the commissioning phase is completed. A manual dump valve will adjust the firewater flow while the outlet valve of the pump will be closed. The provider of the pump used 1026 kg/m^3 as the seawater density, which is also recommendable to use in this test. It is desirable to test one of the two pumps at a time, means that only one firewater pump is stand-by in an emergency situation. Therefore the test has to be well coordinated along with other critical operations at the platform. References relevant for the test are P&ID's: PH-ME-P-0290-001 & PH-ME-P-0291-001.

General Procedure

Use Table 6.13/6.14 to record the data.

- Measure the distance between the cellar deck and the sea level to be sure of the suction pressure of the pump. This is used in the head calculations later. The total length from the submerged pump to the cellar deck is 49,5 m. The distance from the cellar deck to the discharge level is 1,3 m.
- Start testing one of the pumps, while the other one is in auto-mode.
- Verify that the start-mode selector is switched to auto and press the "TEST START" button. Let it run for 2 hrs to stabilize temperatures.
  It is recommended to start verifying the right hand side of the pump characteristic. Start by opening the manual dump valve a few percent (48-HV-93544A/B), close the outlet valve (48-HV-93547A/B) before opening the dump valve entirely. Record the flow, pressures and temperatures at this point, which will be the first of six desirable points. The approximated flow though the pump at this time should be around 2300 m^3/h. This flow represent the rated point of the pump; at this point the differential head should be between 173,5 – 182 mlc. This is according to API 610 (appendix E).
- Visually go over the system to look for abnormal vibrations or leakages. This should be repeated for every flow.
- Slowly operate the manually dump valve towards closed to adjust the flow through the pump. Use the table and record the parameters.
  Desirable recordings are 2100, 1750, 1550, 1200, 1000 m^3/h.
- Stop the pump by switching the start-mode selector to manual, and press the "STOP Diesel Engine" button.
- Close the manual dump valve (48-HV-93544A/B).
- Open the outlet valve (48-HV-93547A/B).
- Switch the start-mode selector back to auto, and acknowledge alarms.

After the test, the results should be plotted into the original pump characteristic (appendix L).

Approximate Duration:

The different tests of one single pump are estimated to take around 3 hrs. This time however, could be reduced if some of the desirable data has been collected during the offshore commissioning phase. These tests can be carried out at any time, also after the system is put in service.

5.3 Oil Booster Pumps (11-PA-9101A/B)

Before the test is ready to be executed it needs to be verified that the commissioning phase is completed and the oil train is in operation. The recycle line is designed to handle a maximum flow of 320 m^3/h, which is also the minimum continuous flow through the pump. The first point to be verified on the flow will therefore be just above 320 m^3/h. Use the metering station for export oil to verify the density of the oil.
References relevant for the test are P&ID: PH-ME-P-0132-001.

General Procedure
Use Table 6.15/6.16 to record the data.

- Start testing the stand-by pump.
- Measure and record the relevant XV open/close times and leave the valves in auto.
- Record the tuning parameters of the minimum-flow valve (11-FIC-92347A/B) and leave the flow regulation in auto.
- Start the stand-by pump using the start-up sequence and let it run for 15-20 min to stabilize temperatures, if not recently started.
- Use the minimum-flow valve to regulate the flow. It is recommended to start verifying the left hand side of the pump characteristic. Start reducing the flow towards the minimum continuous flow, by regulating the outlet valve 11-V-90245/9. The first desirable point will be at 340 m^3/h, verify that the low-flow alarm activates.
  Record the flow, pressures, speed and temperatures at this point, which will be the first of six points.
- Visually go over the system to look for abnormal vibrations or leakages. This should be repeated for every flow.
- Slowly operate the outlet valve to increase the flow through the pump. Operate the minimum-flow regulation in manual to help reaching the desirable points.
  Use the table and record the parameters. Desirable recordings are 450, 550, 790, 900, 950 m^3/h. It is recommended to stop the parallel pump when the total flow though the system exceeds 790 m^3/h.
  790 m^3/h represent the rated point of the pump; at this point the differential head should be between 79 – 84,5 mlc, while the power should not exceed 182 kW. This is according to API 610 (appendices E).

After the test, the results should be plotted into the original pump characteristic (appendix M).

Approximate Duration:
The different tests of one single pump are estimated to take around 1-2 hrs. This time however, could be reduced if some of the desirable data has been collected during the offshore commissioning phase. These tests can be carried out at any time, also after the system is put in service.

5.4 Oil Export Pumps (11-PA-9102A/B)

Before the test is ready to be executed it needs to be verified that the commissioning phase is completed and the oil train is in operation. The recycle line is designed to handle a maximum flow of 360 m^3/h, which is also the minimum continuous flow through the pump. The first point to be verified on the flow will therefore be just above 360 m^3/h. Use the metering station for export oil to verify the density of the oil.
References relevant for the test are P&ID: PH-ME-P-0133-001.

General Procedure
Use Table 6.17/6.18 to record the data.

- Start testing the stand-by pump.
- Measure and record the relevant XV open/close times and leave the valves in auto.
- Record the tuning parameters of the minimum-flow valve (11-FIC-92367A/B) and leave the flow-regulation in auto.
- Start the 2nd Booster Pump. This to make sure the export pumps got enough NPSH.
- Start the stand-by pump using the start-up sequence and let it run for 15-20 min to stabilize temperatures, if not recently started.
- Use the minimum-flow valve to regulate the flow. It is recommended to start verifying the left hand side of the pump characteristic. Start reducing the flow towards the minimum continuous flow, by regulating 11-LIC-92264. The first desirable point will be at 380 m^3/h, verify that the low-flow alarm activates.
  Record the flow, pressures and temperatures at this point, which will be the first of six points.
- Visually go over the system to look for abnormal vibrations or leakages. This should be repeated for every flow.
- Slowly operate 11-LIC-92264, and increase the flow through the pump. Operate the minimum-flow regulation in manual to help reaching the desirable points. NB! Do not forget to observe the oil level in the 2nd oil separator during this operation, and keep the level inside the boundaries. Use the table and record the parameters. Desirable recordings are 500, 650, 795, 900, 1050 m^3/h. It is recommended to stop the parallel pump when the total flow though the system exceeds 795 m^3/h.
  795 m^3/h represent the rated point of the pump; at this point the differential head should be between 789 – 821 mlc, while the power should not exceed 1872 kW. This is according to API 610 (appendices E).

After the test, the results should be plotted into the original pump characteristic (appendix N).

Approximate Duration:
The different tests of one single pump are estimated to take around 1-2 hrs. This time however, could be reduced if some of the desirable data has been collected during the offshore commissioning phase. These tests can be carried out at any time, also after the system is put in service.

5.5 1st Stage Gas Compressor (23-KA-9101)

Technical literature used to define the performance test of the centrifugal compressors is taken from; Ford, 2007.
Before the test is ready to be executed it needs to be verified that the commissioning phase is completed and the surge line is properly implemented. The recycle line is designed to handle a flow up to 54 000 m^3/h with a differential pressure of 7,4 bar, which means that the recycle line can almost handle the maximum flow of the compressor. However, by running gas on recycle this will affect the molecular weight (i.e. become leaner), it is therefore recommended to let the compressor operate under normal conditions as far as possible.
Since there is not installed any sampler for measuring molecular weight, there is a problem related to the sampling operation. For a centrifugal compressor it is recommended to take three different gas samples related to the anti-surge valve position. However, since the amount of gas that is being produced at Valhall is significantly below the designed capacity of the new compressors, it is assumed that the anti-surge valve position may never be entirely closed. With this information it is only required two gas samples during the test.
The sampling operation, however, is a critical operation where the operator has to couple a sample bottle up to a high-pressure hydrocarbon system. It is therefore important to be aware of the hazard this can lead to, and that the operation has to be well planed. The sample will be sent to shore to be analyzed.
References relevant for the test are P&ID's: PH-ME-P-0151-001, PH-ME-P-0152-001, PH-ME-P-0153-001 & PH-ME-P-0160-001.

General Procedure

Use Table 6.19 to record the data.

- Record the relevant XV open/close times. NB! This has to be collected during offshore commissioning, or in a start-up sequence.
- Record the final ASC (Anti-Surge Control) tuning parameters (23-FIC-92543).
- Start the compressor using the start-up sequence and bring the compressor up to load.
- Ensure that the compressor suction temperature (23-TI-92533) and pressure (23-PI-92532) are in normal operating range (approximately 40°C and 3,5 barg).
- Ensure the compressor discharge cooler (23-TIC-92604) is operating in the normal operating range.
- Put the anti-surge valve (23-FIC-92543) into manual, and slowly increase the output signal to 100 % (fully opened). The first desirable flow recording is at 58 000 m^3/h (around 187 t/h), locate this parameter at the CCP (Compressor Control Panel) if not available in PCS.
- Visually go over the compressor to verify that everything is working according to design.
- Take a gas sample for molar weight analysis. It is recommended to use the isokinetic sample valve (23-AE-92527-S2), located downstream 1st stage suction scrubber.
- Record the following data:
    - The speed, only relevant to record it once since it is fixed speed
    - The flow
    - The recycle valve position
    - The inlet and outlet temperature
    - The inlet and outlet pressure
    - Bearing temperatures

- Vibrations

➢ Operate the anti-surge valve towards zero, and make 5 more recordings of the parameters listed above. NB! Confirm that ASC will automatically switch back to auto-mode on detection of surge.
Desirable flow recordings are 56 000, 53 000, 50 000, 45 000, 40 000 m^3/h.
It is desirable to take a gas sample when the recycle flow is at minimum.
53 000 m^3/h represent the rated point of the compressor; at this point the differential head should be between 142 – 149 kj/kg, while the power should not exceed 10,08 MW (API 617, 2002).
To operate the compressor at lower flow, it may be desirable to close the outlet valve (23-ESDV-92551A) to obtain high pressure and low flow. But, make sure the compressor does not reach the region of surge and that the hot-gas recycle valve (23-FV-92542) is held closed. Visually go over the compressor for each flow recording.

Approximate Duration
The performance test of the 1st stage gas compressor should take about 3-4 hrs. However if data is collected during offshore commissioning, particularly during the set up of the anti-surge controller, then this time may be reduced. This test can be carried out at any stage after the compressor is available by operating it on recycle.

5.6 2nd Stage Gas Compressor (23-KA-9102)

Before the test is ready to be executed it needs to be verified that the commissioning phase is completed and the surge line is properly implemented. The recycle line is designed to handle a flow up to 18 650 m^3/h with a differential pressure of 20,9 bar, which means that the recycle line can almost handle the maximum flow of the compressor.
It is recommended to take two gas samples during the test, all related to the anti-surge valve position. The sampling operation, however, is a critical operation where the operator has to couple a sample bottle up to a high-pressure hydrocarbon system. It is therefore important to be aware of the hazard this can lead to, and that the operation has to be well planed. The sample will be sent to shore for analyzing.
References relevant for the test are P&ID's: PH-ME-P-0160-001, PH-ME-P-0161-001, PH-ME-P-0162-001, PH-ME-P-0170-001 & PH-ME-P-0170-002.

General Procedure
Use Table 6.20 to record the data.

➢ Record the relevant XV open/close times. NB! This has to be collected during offshore commissioning, or in a start-up sequence.
➢ Record the final ASC tuning parameters (23-FIC-92643).
➢ Start the compressor using the start-up sequence and bring the compressor up to load.
➢ Ensure that the compressor suction temperature (23-TI-92633) and pressure (23-PI-92632) are in normal operating range (approximately 24°C and 11 barg).
➢ Ensure the compressor discharge cooler (24-TIC-92774) is operating in the normal operating range.
➢ Put the anti-surge valve (23-FIC-92643) into manual, and slowly increase the output signal to 100 % (fully opened). The first desirable flow recording is at 20 000 m^3/h (around 220 t/h), locate this parameter at the CCP if not available in PCS.

- Visually go over the compressor to verify that everything is working according to design.
- Take a gas sample for molar weight analysis. It is recommended to use the isokinetic sample valve (23-AE-92627-S2), located downstream 2nd stage suction scrubber.
- Record the following data:
  - The speed, only relevant to record it once since it is fixed speed
  - The flow
  - The recycle valve position
  - The inlet and outlet temperature
  - The inlet and outlet pressure
  - Bearing temperatures
  - Vibrations
- Operate the anti-surge valve towards zero, and make 5 more recordings of the parameters listed above. NB! Confirm that ASC will automatically switch back to auto-mode on detection of surge.
  Desirable flow recordings are 19 500, 18 700, 17 200, 16 000, 14 000 m^3/h.
  It is desirable to take a gas sample when the recycle flow is at minimum.
  17 200 m^3/h represent the rated point of the compressor; at this point the differential head should be between 133 – 140 kj/kg, while the power should not exceed 10,00 MW (API 617, 2002).
  To operate the compressor at lower flow, it may be desirable to close the outlet valve (23-ESDV-92651A) to obtain high pressure and low flow. But, make sure the compressor does not reach the region of surge and that the hot-gas recycle valve (23-FV-92642) is held closed. Visually go over the compressor for each flow recording.

Approximate Duration
The performance test of the 2nd stage gas compressor should take about 3-4 hrs. However if data is collected during offshore commissioning, particularly during the set up of the anti-surge controller, then this time may be reduced. This test can be carried out at any stage after the compressor is available by operating it on recycle.

5.7 3rd Stage Gas Compressor (23-KA-9103)

Before the test is ready to be executed it needs to be verified that the commissioning phase is completed and the surge line is properly implemented. The recycle line is designed to handle a flow up to 9 160 m^3/h with a differential pressure of 32,3 bar, which means that the recycle line can almost handle the maximum flow of the compressor.
It is recommended to take two different samples during the test, all related to the anti-surge valve position. The sampling operation, however, is a critical operation where the operator has to couple a sample bottle up to a high-pressure hydrocarbon system. It is therefore important to be aware of the hazard this can lead to, and that the operation has to be well planed. The sample will be sent to shore for analyzing.
References relevant for the test are P&ID's: PH-ME-P-0170-003, PH-ME-P-0171-001, PH-ME-P-0172-001 & PH-ME-P-0180-001.

General Procedure

Use Table 6.21 to record the data.

- Record the relevant XV open/close times. NB! This has to be collected during offshore commissioning, or in a start-up sequence.
- Record the final ASC tuning parameters (24-FIC-92743).
- Start the compressor using the start-up sequence and bring the compressor up to load.
- Ensure that the compressor suction temperature (23-TI-92733) and pressure (23-PI-92732) are in normal operating range (approximately 18^{o}C and 33 barg).
- Ensure the compressor discharge cooler (23-TIC-92704) is operating in the normal operating range.
- Put the anti-surge valve (24-FIC-92743) into manual, and slowly increase the output signal to 100 % (fully opened). The first desirable flow recording is at 10 500 m^3/h (around 420 t/h), locate this parameter at the CCP if not available in PCS.
- Visually go over the compressor to verify that everything is working according to design.
- Take a gas sample for molar weight analysis. It is recommended to use the isokinetic sample valve (23-AE-92727-S2), located downstream 3rd stage suction scrubber.
- Record the following data:
  - The speed, only relevant to record it once since it is fixed speed
  - The flow
  - The recycle valve position
  - The inlet and outlet temperature
  - The inlet and outlet pressure
  - Bearing temperatures
  - Vibrations
- Operate the anti-surge valve towards zero, and make 5 more recordings of the parameters listed above. NB! Confirm that ASC will automatically switch back to auto-mode on detection of surge.
  Desirable flow recordings are 10 000, 9 150, 8 150, 7 300, 6 300 m^3/h.
  It is desirable to take a gas sample when the recycle flow is at minimum.
  8 150 m^3/h represent the rated point of the compressor; at this point the differential head should be between 68 – 71,5 kj/kg, while the power should not exceed 8 560 kW (API 617, 2002).
  To operate the compressor at lower flow, it may be desirable to close the outlet valve (24-ESDV-92751A) to obtain high pressure and low flow. But, make sure the compressor does not reach the region of surge and that the hot-gas recycle valve (23-FV-92742) is held closed. Visually go over the compressor for each flow recording.

Approximate Duration

The performance test of the 3rd stage gas compressor should take about 3-4 hrs. However if data is collected during offshore commissioning, particularly during the set up of the anti-surge controller, then this time may be reduced. This test can be carried out at any stage after the compressor is available by operating it on recycle.

5.8 4th Stage Gas Compressor (27-KA-9104)

Before the test is ready to be executed it needs to be verified that the commissioning phase is completed and the surge line is properly implemented. The recycle line is designed to handle a flow up to 3 500 m^3/h with a differential pressure of 67,3 bar, which means that the recycle line can almost handle the maximum flow of the compressor. However, by running gas on recycle this will affect the molecular weight (i.e. become leaner), it is therefore recommended to let the compressor operate under normal conditions as far as possible.
References relevant for the test are P&ID's: PH-ME-P-0195-004, PH-ME-P-0195-005, PH-ME-P-0199-001 & PH-ME-P-0205-002.

General Procedure

Use Table 6.22 to record the data.

- Record the relevant XV open/close times. NB! This has to be done when the compressor is stopped, or in a start-up sequence.
- Record the final ASC tuning parameters (27-FIC-92943).
- Start the compressor using the start-up sequence and bring the compressor up to load.
- Ensure that the compressor suction temperature (27-TI-92933) and pressure (23-PI-92932) are in normal operating range (approximately 16°C and 47 barg).
- Ensure the compressor discharge cooler (27-TIC-93004) is operating in the normal operating range.
- Put the anti-surge valve (27-FIC-92943) into manual, and slowly increase the output signal to 100 % (fully opened). The first desirable flow recording is at 4 200 m^3/h (around 167 t/h), locate this parameter at the CCP if not available in PCS.
  Visually go over the compressor to verify that everything is working according to design.
  Record the following data:
  - The speed, only relevant to record it once since it is fixed speed
  - The flow
  - The recycle valve position
  - The inlet and outlet temperature
  - The inlet and outlet pressure
  - The molar weight
  - Bearing temperatures
  - Vibrations
- Operate the anti-surge valve towards zero, and make 5 more recordings of the parameters listed above. NB! Confirm that ASC will automatically switch back to auto-mode on detection of surge.
  Desirable flow recordings are 3 800, 3 500, 3 050, 2 700, 2 400 m^3/h.
  3 050 m^3/h represent the rated point of the compressor; at this point the differential head should be between 127 – 133,5 kj/kg, while the power should not exceed 6 750 kW (API 617, 2002).
  To operate the compressor at lower flow, it may be desirable to close the outlet valve (27-ESDV-93019A) to obtain high pressure and low flow. But, make sure the compressor does not reach the region of surge and that the hot-gas recycle valve (27-FV-92942) is held closed. Visually go over the compressor for each flow recording.

Approximate Duration

The performance test of the 4th stage gas compressor should take about 3-4 hrs. However if data is collected during offshore commissioning, particularly during the set up of the anti-surge controller, then this time may be reduced. This test can be carried out at any stage after the compressor is available by operating it on recycle.

6 Calculation

For the rotational equipment it is desirable to verify that the characteristic is the same as it was during the FAT. This is done in order to verify that the purchaser gets the product he paid for. The characteristic is verified through head versus flow, and is plotted against the curves given from the manufacture. For units related to the following calculations please check *Units* at page 7.

Centrifugal pumps:

For centrifugal pumps, the formula used to calculate total dynamic head is given by:

$$H_d = \frac{p_o - p_i}{\rho \cdot g} + \frac{v_o^2 - v_i^2}{2 \cdot g}$$

(GPSA, 2004)

Where v_i and v_o expresses the inlet and outlet velocity, measured in m/s.

In relation, most flow versus head characteristics is given in m^3/h of flow.

Example:

$Q = 2400 m^3/h$

$p_i = 1{,}27 bar(g) = 127000 Pa$ $\qquad$ $\rho = 1030 kg/m^3$

$p_o = 9{,}29 bar(g) = 929000 Pa$ $\qquad$ $g = 9{,}81 m/s^2$

First the liquid velocity in and out of the pump flanges needs to be calculated.

$$d_i = 35" = \frac{35 \cdot 25{,}4}{1000} = 0{,}889 m \qquad d_o = 18" = \frac{18 \cdot 25{,}4}{1000} = 0{,}4572 m$$

$$A_i = \frac{\pi \cdot d_i^2}{4} = \frac{\pi \cdot (0{,}889)^2}{4} = 0{,}621 m^2 \qquad A_o = \frac{\pi \cdot d_o^2}{4} = \frac{\pi \cdot (0{,}4572)^2}{4} = 0{,}164 m^2$$

$$Q = 2400 m^3/h = \frac{2400}{3600} = 0{,}667 m^3/s$$

$$v_i = \frac{Q}{A_i} = \frac{0{,}667 m^3/s}{0{,}621 m^2} = 1{,}07 m/s \qquad v_o = \frac{Q}{A_o} = \frac{0{,}667 m^3/s}{0{,}164 m^2} = 4{,}07 m/s$$

The total dynamic head of the pump is then calculated, and in relation to the flow, plotted and compared with the characteristic given by the provider of the centrifugal pump:

$$H_d = \frac{929000 Pa - 127000 Pa}{1030 kg/m^3 \cdot 9{,}81 m/s^2} + \frac{(4{,}07 m/s)^2 - (1{,}07 m/s)^2}{2 \cdot 9{,}81 m/s^2} = \underline{80{,}16 mlc}$$

Centrifugal compressors:

For centrifugal gas compressors, the formula used to calculate flow and polytrophic head is given by:

$$Q = \frac{w \cdot R \cdot T_i \cdot Z_i}{M \cdot p_i} \quad \text{(GPSA, 2004)}$$

$$H_p = \frac{Z_{avg} \cdot R \cdot T_i}{M \cdot \frac{(n-1)}{n}} \left[\left(\frac{p_o}{p_i} \right)^{\frac{(n-1)}{n}} - 1 \right] \quad \text{(GPSA, 2004)}$$

Where:

$$Z_{avg} = \frac{Z_i + Z_o}{2}$$

$$\frac{T_o}{T_i} = \left(\frac{p_o}{p_i} \right)^{\frac{(n-1)}{n}} \Rightarrow \frac{(n-1)}{n} = \frac{\ln\left(\frac{T_o}{T_i} \right)}{\ln\left(\frac{p_o}{p_i} \right)} \quad \text{(GPSA, 2004)}$$

Example:

$w = 150000 kg/h$

$T_o = 120^o C = 393{,}15 K$ $\qquad$ $T_i = 15^o C = 288{,}15 K$

$p_i = 3{,}36 bar(g) = 336 kPa$ $\qquad$ $p_o = 10{,}75 bar(g) = 1075 kPa$

$M = 22{,}572 kg/Kmol$

$Z_i = 0{,}983$, *found in compressibility charts (appendices)*

$Z_o = 0{,}932$, *found in compressibility charts (appendices)*

$$Z_{avg} = \frac{0{,}983 + 0{,}932}{2} = 0{,}958$$

$$\frac{(n-1)}{n} = \frac{\ln\left(\frac{393{,}15 K}{288{,}15 K} \right)}{\ln\left(\frac{1075 kPa}{336 kPa} \right)} = 0{,}267$$

The volumetric flow is then calculated:

$$Q = \frac{150000 kg/h \cdot 8{,}314 \cdot 288{,}15 K \cdot 0{,}983}{22{,}572 kg/Kmol \cdot 336 kPa} = \underline{46576 m^3/h}$$

The polytrophic head is then calculated, and in relation to the flow, plotted and compared with the characteristic given by the provider of the centrifugal compressor:

$$H_p = \frac{0{,}958 \cdot 8{,}314 \cdot 288{,}15 K}{22{,}572 kg/kmol \cdot 0{,}267} \left[\left(\frac{1075 kPa}{336 kPa} \right)^{0{,}267} - 1 \right] = \underline{138{,}7 kJ/kg}$$

7 Discussion

When the objectives for the submission were first introduced there were a few discussions relating to the contents of the thesis. This was resolved in a tidy way, where the involved parties introduced their opinion on what the report should contain. It was in this process where it was selected to have main focus on one particular system, the seawater system. Along with this system it was decided to describe a verification program for other chosen rotational items of equipment. Afterthoughts and discussions has revealed that this might have been solved out in a better and more effectively way. This is particularly relevant to the performance verification program of the many items of rotational equipment, where it has been suggested that a more effectively way would be to describe the method of one centrifugal pump and one centrifugal compressor instead of describing all the rotational equipment along with tag numbers and specific data. The reason for this is that Chapter 5, performance test rotational equipment, might seem a bit repetitive, especially as it contains a large number of equipment items. It was, however, during the project accepted to avoid some of the rotational equipment mentioned in the submission of the thesis, this was equipment like the HP/LP knock-out drum pumps and jet water pumps. The reason for this decision was that these pumps were deemed less critical and of a more minor scale and size, compared with the larger pumps and compressors.

During the thesis, some aspects have been highlighted as possible root causes for potential errors and gaps in the performance testing results. These are summarized below.
Relating to the submersed pumps, such as firewater, LP and HP seawater lift, there has been revealed a problem of measuring the suction pressure. The reason for this issue is that the pumps are submersed into the seawater beneath the platform and therefore not equipped with pressure gauges at the suction side. This problem is solved by finding the exact length of the pump unit from the submerged rotational impeller and up to the outlet flange. By measuring the differential level from the sea level to the outlet flange, the submersed length of the pump can be determined. This depth is used to calculate the inlet pressure to the pumps. However, this method could lead to a few errors, especially if the sea is upset and large waves are introduced.

Another parameter that might lead to errors or mismatches when calculating the performance of equipment is the density of the medium running through it. Density is a parameter that changes marginally with temperature deviations. It was therefore decided for majority of equipment to measure the density during the performance test to be sure. However, because the changes are relatively low, the same value as used for the factory acceptances test shall be used for all the equipment involving seawater. In other rotational equipment the density is measured, either by analyzing a sample in the lab or by an online sampling station.

The main problem relating to the gas compressors is associated with the molar weight of the gas running through them. The P&ID's revealed that only the 4th stage had installed gas chromatograph to sample the molar weight. As stated in the report, the gas that is forced to flow through the recycle loop of the compressor shall get progressively leaner over time. This implies the molar weight shall reduce proportionally with closure of the anti-surge valve position. This would have given a mismatch according to the head calculation if a simulated value for the molar weight had been used. First it was suggested to take three gas samples for each of the compressor stages, everyone at different anti-surge valve position. But, since one of the samples was recommended to be taken when the anti-surge valve is closed, something

that is very hard to achieve because of the small amount of produced gas at Valhall, it was decided to only take two gas samples for each of the compressor stages. This will give a more realistic molar weight and hence picture of the gas compressor performance. However, this method introduces a high risk relating to the sampling operation, where the sampling bottles need to be connected to high-pressure hydrocarbon systems. It is stated that due care needs to be exercised when performing this operation.
A problem has also occurred when defining the inlet and outlet compressibility factors for the compressors. To define the exact compressibility factors a comprehensive calculation needs to be carried out. A much less comprehensive way to define this value is to use pre-made compressibility charts of natural gases (with leaner molar weight than 40 kg/kmol). The problem is first that the charts do not include every single molar weight, and second that the exact molar weight is hard to define. By interpolating between two nearby charts, the suspected compressibility factors are found. This might lead to some mismatches in the calculation part. The charts are attached to this report.

Another issue related to this thesis and the literature, is the use of sources found in the VRD-project's internal database, ShareCat, where each equipment supplier deposits important information relating to their product. This is a database that only project personnel can access, and could therefore lead to some misinterpretation for external personnel not having this access. By attaching all the relevant literature, the report can be read and understood by external personnel. There will also be engaged an internal BP employee to assist the evaluation part of the report.

At the time of writing this document there has been discussion in the VRD-project regarding the alarm settings in the new process modules. When searching the documentation given by the many providers, a lot of vendor recommended alarm limits were found. But, when studying the alarm limits set by the responsible personnel in the VRD-project, there was found a mismatch between the settings. This is particularly relevant to vibration and temperature limits, where it is observed that the VRD-project has specified more conservative alarm and trip limits compared to vendor recommendation. This report refers to the alarm settings given by the project, due to this conservatism. As the alarm settings are likely to change (through a managed change process) throughout start-up, the "final" limits have not been specified. Where relevant the test sheets identify this uncertainty, reminding the executing personnel that these limits were not decided at the time of writing.

Hence although there are uncertainties and potential errors relating to the performance testing results, the submitted verification program still is suitable for defining whether the equipment is performing according to the guarantee point or not. But following this procedure it is hoped that the VRD project and ultimately BP Norway Valhall asset will obtain some valuable information regarding the performance of some key equipment.

8 Conclusion

The objective for this master thesis was to outline a program on how to test the performance of chosen equipment on the new field centre (PH) at Valhall. The system that was decided to review in detail was the seawater system, and in particular the LP and HP seawater systems. Along with these systems it was decided to outline a less comprehensive performance verification program for other rotational equipment. The method selected for the verification was to record some of the conditioning monitoring parameters, such as suction and discharge pressure, and thereby calculate the head of the rotational equipment. In relation to the flow through the equipment, the head versus flow points can be plotted against the original characteristic given by the provider. By use of this method, the performance of the equipment can be measured and reviewed for acceptability. The aim of the performance test is to verify that the design complies with the equipment guarantee points and is therefore capable of achieving rated production. The candidate recommends the submitted program as a tool to verify the performance of the tested equipment.

References

Misra, K.B. (2008), *Handbook of Performability Engineering.* Springer-Verlag London Limited, United kingdom.

Bjørge Eureka AS (2009), *Eureka Seawater Lift Pumps.* Compendium.

Frank Mohn Flatøy (2006), *Technical Description Electrical Submersible Pump.* Compendium

Girdhar, P. and Moniz, O. (2005), *Practical centrifugal pumps: design, operation and maintenance*. Elsevier, Amsterdam, Holland.

Palgrave, R. (2003), *Troubleshooting Centrifugal Pumps and Their Systems.* Elsevier, Oxford, United Kingdom.

Carstensen, C. (2009), *Process Plants For Oil And Gas.* Rev. 1 C, University of Stavanger, Norway.

Odland, J. (2000), *Offshore Field Development.* Compendium, University of Stavanger, Norway.

Sharp, D.B. and Sharp B.B. (1996), *Water Hammer: Practical Solutions*. New York, Halsted Press, USA.

T H Webb, T.H., Gould, B.W., Hardie, J. (1978), *Water Hammer.* Kensington, New South Wales University Press, USA.

DNV (2001), *Qualification Procedures for New Technology, DNV-RP-A203.*

API Standard 610 (2004), *Centrifugal Pumps for Petroleum, Petrochemicals and Natural Gas Industries.* 10th Edition. API Publishing Services, Washington D.C., USA.

API Standard 617 (2002), *Axial and Centrifugal Compressors and Expander-compressors for Petroleum, Chemical and Gas Industry Services. 7th Edition.* API Publishing Services, Washington D.C., USA.

ISS International (2006), *Commissioning & Start-Up Directory.* Compendium.

Fisher (2005), *Control Valve Handbook.* 4th Edition. Fisher Controls International Inc, Marshalltown, Iowa, USA.

Riveland, M. (1985), *Fundamental of Valve Sizing for Liquids.* Fisher Controls International, Inc, Marshalltown, Iowa, USA.

Nergaard, A. (2009), *Basics Hydraulic System Design.* University of Stavanger, Norway.

Crane Co. (1979), *Flow of Fluids Through Valves, Fittings and Pipes*. 2nd printing, Crane Co, New York, USA.

McCabe, W.L., Smith, J.C., Harriot, P. (1993) *Unit Operations in Chemical Engineering.* 5th Edition. The McGraw-Hill Companies, New Jersey, USA.

Bird, R.B., Stewart, W.E., Lightfoot, E.N. (2007), *Transport Phenomena.* 2nd edition. John Wiley & Sons LTD, West Sussex, England

Eisenmann, R.C. and Eisenmann R.C. Jr. (2005), *Machinery Malfunctions Diagnosis and Correction.* Prentice Hall, New Jersey, USA.

Hongyun, L. and Hanwei, L. (2009), *Analysis of Centrifugal Pump Vibration and Solutions.* Petroleum refinery engineering, 39, Part 6.

Gas Processors Suppliers Association (2004), *Engineering Data Book.* 12th edition. Tulsa, Oklahoma, USA.

Ford K.R. (2007), *Uncertainty in Centrifugal Compressor Performance Field Testing.* Ohio State University, USA.

Test Sheets

84-FIC-93249								
FIC tuning parameters, Start	Date		Gain		Integr.		Derv.	
FIC tuning parameters, Final	Date		Gain		Integr.		Derv.	

TABLE 6.1 TUNING PARAMETRS 84-FIC-93294

84-TIC-93286A								
TIC tuning parameters, Start	Date		Gain		Integr.		Derv.	
TIC tuning parameters, Final	Date		Gain		Integr.		Derv.	

TABLE 6.2 TUNING PARAMETRS 84-TIC-93286A

84-TIC-93286B								
TIC tuning parameters, Start	Date		Gain		Integr.		Derv.	
TIC tuning parameters, Final	Date		Gain		Integr.		Derv.	

TABLE 6.3 TUNING PARAMETRS 84-TIC-93286B

LP Seawater Lift Pump A (84-PX-9101A)									
Date and time	-	-	-						
	Norm	Alarm	Max	1	2	3	4	5	6
Flowrate (84-FIC-93207A) [m^3/h]	2400	-	3100						
Distance from cellar deck to sea level [m]	34	-	-		-	-	-	-	-
Discharge pressure (84-PI-93207A)[Barg]	3,5	6,8	14						
Discharge temp. (84-TI-93207A) [^oC]	6	-	50						
Power (84-PX-9101A) [kW]	667	-	730						
Speed (84-NI-95500A) [rpm]	1180	-	1192		-	-	-	-	-
Min flow position (84-FV-93207A) [%]	0	-	100						
Tuning parameters (84-FIC-93207A)	-	-	-	Gain		Integr.		Derv.	
Vib. NDE motor (84-YI-95500A) [mm/s]	3	4,5	7,1						
Vib. DE motor (84-YI-95501A) [mm/s]	3	4,5	7,1						
Vib. Shaft (84-YI-95510A) [mm/s]	3	5	8						
Vib. Shaft (84-YI-95511A) [mm/s]	3	5	8						
Temp. NDE motor (84-TI-95500A) [^oC]	70	110	120						
Temp. windings (84-TI-95502A) [^oC]	70	135	145						
Temp. windings (84-TI-95505A) [^oC]	70	135	145						
Temp. windings (84-TI-95508A) [^oC]	70	135	145						
Temp. DE motor (84-TI-95511A) [^oC]	70	110	120						
Open / Close time (84-XV-93212A) [s]	6	-	18		Opening			Closing	
Open / Close time (84-XV-93202A) [s]	1	-	4		Opening			Closing	

TABLE 6.4 LP SEAWATER LIFT PUMP A

LP Seawater Lift Pump B (84-PX-9101B)									
Date and time	-	-	-						
	Norm	Alarm	Max	1	2	3	4	5	6
Flowrate (84-FIC-93207B) [m^3/h]	2400	-	3100						
Distance from cellar deck to sea level [m]	34	-	-		-	-	-	-	-
Discharge pressure (84-PI-93207B)[Barg]	3,5	6,8	14						
Discharge temp. (84-TI-93207B) [^oC]	6	-	50						
Power (84-PX-9101B) [kW]	667	-	730						
Speed (84-NI-95500B) [rpm]	1180	-	1192		-	-	-	-	-
Min flow position (84-FV-93207B) [%]	0	-	100						
Tuning parameters (84-FIC-93207B)	-	-	-	Gain		Integr.		Derv.	
Vib. NDE motor (84-YI-95500B) [mm/s]	3	4,5	7,1						
Vib. DE motor (84-YI-95501B) [mm/s]	3	4,5	7,1						
Vib. Shaft (84-YI-95510B) [mm/s]	3	5	8						
Vib. Shaft (84-YI-95511B) [mm/s]	3	5	8						
Temp. NDE motor (84-TI-95500B) [^oC]	70	110	120						
Temp. windings (84-TI-95502B) [^oC]	70	135	145						
Temp. windings (84-TI-95505B) [^oC]	70	135	145						
Temp. windings (84-TI-95508B) [^oC]	70	135	145						
Temp. DE motor (84-TI-95511B) [^oC]	70	110	120						
Open / Close time (84-XV-93212B) [s]	6	-	18		Opening			Closing	
Open / Close time (84-XV-93202B) [s]	2	-	4		Opening			Closing	

TABLE 6.5 LP SEAWATER LIFT PUMP B

84-TIC-93233								
TIC tuning parameters, Start	Date		Gain		Integr.		Derv.	
TIC tuning parameters, Final	Date		Gain		Integr.		Derv.	

TABLE 6.6 TUNING PARAMETRS 84-FIC-93233

84-TIC-91771A								
TIC tuning parameters, Start	Date		Gain		Integr.		Derv.	
TIC tuning parameters, Final	Date		Gain		Integr.		Derv.	

TABLE 6.7 TUNING PARAMETRS 84-TIC-91771A

84-TIC-91771B								
TIC tuning parameters, Start	Date		Gain		Integr.		Derv.	
TIC tuning parameters, Final	Date		Gain		Integr.		Derv.	

TABLE 6.8 TUNING PARAMETRS 84-TIC-91771B

HP Seawater Lift Pump A (84-PX-9102A)									
Date and time	-	-	-						
	Norm	Alarm	Max	1	2	3	4	5	6
Flowrate (84-FIC-93477A) [m^3/h]	900	-	1050						
Distance from cellar deck to sea level [m]	32	-	-		-	-	-	-	-
Discharge pressure (84-PI-93477A)[Barg]	9,7	12,3	14						
Discharge temp. (84-TI-93477A) [^oC]	6	-	50						
Power (84-PX-9102A) [kW]	435	-	500						
Min flow position (84-FV-93477A) [%]	0	-	100						
FIC tuning parameters	-	-	-	Gain		Integr.		Derv.	
Open / Close time (84-XV-93212A) [s]	5	-	14	Opening			Closing		
Open / Close time (84-XV-93202A) [s]	2	-	4	Opening			Closing		

TABLE 6.9 HP SEAWATER LIFT PUMP A

HP Seawater Lift Pump B (84-PX-9102B)									
Date and time	-	-	-						
	Norm	Alarm	Max	1	2	3	4	5	6
Flowrate (84-FIC-93477B) [m^3/h]	900	-	1050						
Distance from cellar deck to sea level [m]	32	-	-		-	-	-	-	-
Discharge pressure (84-PI-93477B)[Barg]	9,7	12,3	14						
Discharge temp. (84-TI-93477B) [^oC]	6	-	50						
Power (84-PX-9102B) [kW]	435	-	500						
Min flow position (84-FV-93477B) [%]	0	-	100						
Tuning parameters (84-FIC-93477B)	-	-	-	Gain		Integr.		Derv.	
Open / Close time (84-XV-93212B) [s]	5	-	14	Opening			Closing		
Open / Close time (84-XV-93202B) [s]	2	-	4	Opening			Closing		

TABLE 6.10 HP SEAWATER LIFT PUMP B

Cooling Medium Circulation Pump A (45-PA-9106A)									
Date and time	-	-	-						
	Norm	Alarm	Max	1	2	3	4	5	6
Flowrate (45-FIC-93267A) [m^3/h]	1550	-	2040						
Density [kg/m^3]	1003	-	-						
Suction pressure (45-PI-93264A) [Barg]	4	-	-						
Suction temperature (45-TI-93262A) [^oC]	50	-	127						
Discharge pressure (45-PI-93267A)[Barg]	11,5	-	13,7						
Discharge temp. (45-TI-93267A) [^oC]	50	60	127						
Power (45-PA-9106A) [kW]	323	-	450						
Min flow position (45-FV-93267A) [%]	0	-	100						
Tuning parameters (45-FIC-93267A)	-	-	-	Gain		Integr.		Derv.	
Open / Close time (45-XV-93272A) [s]	8	-	32		Opening			Closing	
Open / Close time (45-XV-93267A) [s]	7	-	20		Opening			Closing	

TABLE 6.11 COOLING MEDIUM CIRCULATION PUMP A

Cooling Medium Circulation Pump B (45-PA-9106B)									
Date and time	-	-	-						
	Norm	Alarm	Max	1	2	3	4	5	6
Flowrate (45-FIC-93267B) [m^3/h]	1550	-	2040						
Suction pressure (45-PI-93264B) [Barg]	4	-	-						
Suction temp. (45-TI-93262B) [^oC]	50	-	127						
Discharge pressure (45-PI-93267B)[Barg]	11,5	-	13,7						
Discharge temp. (45-TI-93267B) [^oC]	50	60	127						
Power (45-PA-9106B) [kW]	323	-	450						
Min flow position (45-FV-93267B) [%]	0	-	100						
Tuning parameters (45-FIC-93267B)	-	-	-	Gain		Integr.		Derv.	
Open / Close time (45-XV-93272B) [s]	8	-	32		Opening			Closing	
Open / Close time (45-XV-93267B) [s]	7	-	20		Opening			Closing	

TABLE 6.12 COOLING MEDIUM CIRCULATION PUMP B

Firewater Pump A (48-XD-9107A)									
Date and time	-	-	-						
	Norm	Alarm	Max	1	2	3	4	5	6
Flowrate (48-FI-93544A) [m^3/h]	2300	-	3425						
Distance from cellar deck to sea level [m]	35	-	-		-	-	-	-	-
Interstage pressure (48-PI-93543A) [Barg]	2,98	-	4,93						
Discharge pressure (48-PI-93544A)[Barg]	14,0	-	16,2						
Speed engine (48-SI-95400A) [rpm]	1850	-	2070		-	-	-	-	-

TABLE 6.13 FIREWATER PUMP A

Firewater Pump B (48-XD-9107B)									
Date and time	-	-	-						
	Norm	Alarm	Max	1	2	3	4	5	6
Flowrate (48-FI-93544B) [m^3/h]	2300	-	3425						
Distance from cellar deck to sea level [m]	35	-	-		-	-	-	-	-
Interstage pressure (48-PI-93543B) [Barg]	2,98	-	4,93						
Discharge pressure (48-PI-93544B)[Barg]	14,0	-	16,2						
Speed engine (48-SI-95400B) [rpm]	1850	-	2070		-	-	-	-	-

TABLE 6.14 FIREWATER PUMP B

Oil Booster Pump A (11-PA-9101A)									
Date and time	-	-	-						
	Norm	Alarm	Max	1	2	3	4	5	6
Flowrate (11-FIC-92347A-01) [m^3/h]	790	950	960						
Oil density at metering station [kg/m^3]	0,786	-	-						
Suction pressure (11-PI-92344A) [Barg]	1,8	-	-						
Suction temperature (11-TI-92342A) [°C]	60	-	-						
Discharge pressure (11-PI-92347A)[Barg]	8	9,2	-						
Discharge temp. (11-TI-92347A) [°C]	60	70	-						
Power engine [kW]	173	-	200						
Min flow position (11-FV-92347A) [%]	0	-	100						
Tuning parameters (11-FIC-92347A)	-	-	-	Gain		Integr.		Derv.	
Open / Close time (11-ESDV-92352A) [s]	8	-	28		Opening			Closing	
Open / Close time (11-ESDV-92349A) [s]	5	-	16		Opening			Closing	

TABLE 6.15 OIL BOOSTER PUMP A

Oil Booster Pump B (11-PA-9101B)									
Date and time	-	-	-						
	Norm	Alarm	Max	1	2	3	4	5	6
Flowrate (11-FIC-92347B-01) [m^3/h]	790	950	960						
Oil density at metering station [kg/m^3]	0,786	-	-						
Suction pressure (11-PI-92344B) [Barg]	1,8	-	-						
Suction temperature (11-TI-92342B) [°C]	60	-	-						
Discharge pressure (11-PI-92347B)[Barg]	8	9,2	-						
Discharge temp. (11-TI-92347B) [°C]	60	70	-						
Power engine [kW]	173	-	200						
Min flow position (11-FV-92347B) [%]	0	-	100						
Tuning parameters (11-FIC-92347B)	-	-	-	Gain		Integr.		Derv.	
Open / Close time (11-ESDV-92352B) [s]	8	-	28		Opening			Closing	
Open / Close time (11-ESDV-92349B) [s]	5	-	16		Opening			Closing	

TABLE 6.16 OIL BOOSTER PUMP B

Oil Export Pump A (11-PA-9102A)									
Date and time	-	-	-						
	Norm	Alarm	Max	1	2	3	4	5	6
Flowrate (11-FIC-92367A-01) [m^3/h]	790	-	1070						
Oil density at metering station [kg/m^3]	0,786	-	-						
Suction pressure (11-PI-92364A) [Barg]	6,5	-	-						
Suction temperature (11-TI-92362A) [°C]	60	-	-						
Discharge pressure (11-PI-92367A)[Barg]	38	43,5	87						
Discharge temp. (11-TI-92367A) [°C]	60	75	-						
Power engine [kW]	860	-	1950						
Speed engine (11-NI-95099A) [rpm]	3560	-	3596		-	-	-	-	-
Min flow position (11-FV-92367A) [%]	0	-	100						
Tuning parameters (11-LIC-92264)	-	-	-	Gain		Integr.		Derv.	
Tuning parameters (11-FIC-92367A)	-	-	-	Gain		Integr.		Derv.	
Open / Close time (11-XV-92372A) [s]	8	-	28		Opening			Closing	
Open / Close time (11-XV-92369A) [s]	5	-	16		Opening			Closing	

TABLE 6.17 OIL EXPORT PUMP A

Oil Export Pump B (11-PA-9102B)									
Date and time	-	-	-						
	Norm	Alarm	Max	1	2	3	4	5	6
Flowrate (11-FIC-92367B-01) [m^3/h]	790	-	1070						
Oil density at metering station [kg/m^3]	0,786	-	-						
Suction pressure (11-PI-92364B) [Barg]	6,5	-	-						
Suction temperature (11-TI-92362B) [^oC]	60	-	-						
Discharge pressure (11-PI-92367B)[Barg]	38	43,5	87						
Discharge temp. (11-TI-92367B) [^oC]	60	75	-						
Power engine [kW]	860	-	1950						
Speed engine (11-NI-95099B) [rpm]	3560	-	3596		-	-	-	-	-
Min flow position (11-FV-92367B) [%]	0	-	100						
Tuning parameters (11-FIC-92367B)	-	-	-	Gain		Integr.		Derv.	
Open / Close time (11-XV-92372B) [s]	8	-	28		Opening			Closing	
Open / Close time (11-XV-92369B) [s]	5	-	16		Opening			Closing	

TABLE 6.18 OIL EXPORT PUMP B

1st Stage Gas Compressor (23-KA-9101)									
Date and time	-	-	-						
	Norm	Alarm	Max	1	2	3	4	5	6
Flowrate (23-FI-92537-01) [10^3 m^3/h]	49,8	-	58,2						
Inlet pressure (23-PI-92532) [Barg]	3,4	6	7,75						
Outlet pressure (23-PI-92539) [Barg]	11	15	15,8						
Inlet temperature (23-TI-92533) [^oC]	40	50	-						
Discharge temp. (23-TI-92539) [^oC]	120	150	154						
Power engine [MW]	9,4	-	11,0						
Speed engine (23-NI-96144) [rpm]	1784	-	1802		-	-	-	-	-
Recycle valve pos. (23-ZI-92543) [%]	30	-	100						
FIC tuning param. (23-FIC-92543)	-	-	-	Gain		Integr.		Derv.	
Vib. DE (23-YI-96105-01) [µm]	30	55	101						
Vib. DE (23-YI-96105-02) [µm]	30	55	101						
Vib. NDE (23-YI-96106-01) [µm]	30	55	101						
Vib. NDE (23-YI-96106-02) [µm]	30	55	101						
Vib. NDE (23-ZI-96107) [µm]	+0,2	+0,3	+0,5						
Temp. DE (23-TI-96101-01) [^oC]	50	60	65						
Temp. DE (23-TI-96101-03) [^oC]	50	60	65						
Temp. NDE (23-TI-96102-01) [^oC]	50	60	65						
Temp. NDE (23-TI-96102-03) [^oC]	50	60	65						
Temp. NDE (23-TI-96103-01) [^oC]	50	70	85						
Temp. NDE (23-TI-96104-01) [^oC]	50	70	85						
Open/Close time (23-ESDV-92501A)	20	-	60		Opening			Closing	
Open/Close time (23-ESDV-92501B)	2	-	4		Opening			Closing	

TABLE 6.19 1ST STAGE GAS COMPRESSOR

2nd Stage Gas Compressor (23-KA-9102)									
Date and time	-	-	-						
	Norm	Alarm	Max	1	2	3	4	5	6
Flowrate (23-FI-92633-01) [10^3 m^3/h]	17,2	-	20,5						
Inlet pressure (23-PI-92632) [Barg]	10,8	15,8	17,5						
Outlet pressure (23-PI-92639) [Barg]	35	43	46,2						
Inlet temp. (23-TI-92633) [°C]	24	35	-						
Outlet temp. (23-TI-92638) [°C]	110	135	140						
Power engine [MW]	9,3	-	11,0						
Speed engine (23-NI-96244) [rpm]	1784	-	1802		-	-	-	-	-
Recycle position (23-ZT-92643) [%]	30	-	100						
FIC tuning param. (23-FIC-92643)	-	-	-	Gain		Integr.		Derv.	
Vib. DE (23-YI-96205-01) [µm]	30	57	82						
Vib. DE (23-YI-96205-02) [µm]	30	57	82						
Vib. NDE (23-YI-96206-01) [µm]	30	57	82						
Vib. NDE (23-YI-96206-02) [µm]	30	57	82						
Vib. NDE (23-ZI-96207) [µm]	+0,2	+0,5	+0,75						
Temp. DE (23-TI-96201-01) [°C]	50	60	65						
Temp. DE (23-TI-96201-03) [°C]	50	60	65						
Temp. NDE (23-TI-96202-01) [°C]	50	60	65						
Temp. NDE (23-TI-96202-03) [°C]	50	60	65						
Temp. NDE (23-TI-96203-01) [°C]	50	70	85						
Temp. NDE (23-TI-96204-01) [°C]	50	70	85						
Open/Close time (23-ESDV-92551A)	22	-	48	Opening			Closing		
Open/Close time (23-ESDV-92551B)	2	-	4	Opening			Closing		
Open/Close time (23-ESDV-92651A)	30	-	62	Opening			Closing		
Open/Close time (23-ESDV-92651B)	3	-	6	Opening			Closing		

TABLE 6.20 2ND STAGE GAS COMPRESSOR

3rd Stage Gas Compressor (23-KA-9103)									
Date and time	-	-	-						
	Norm	Alarm	Max	1	2	3	4	5	6
Flowrate (23-FI-92733-02) [10^3 m^3/h]	81,5	-	107						
Inlet pressure (23-PI-92732) [Barg]	33,3	40	44,75						
Outlet pressure (23-PI-92739) [Barg]	61	89	94						
Inlet temp. (23-TI-92733) [°C]	18,1	30	-						
Discharge temp. (23-TI-92739) [°C]	110	125	140						
Power engine [MW]	7,9	-	11,0						
Speed engine (23-NI-96344) [rpm]	1784	-	1802		-	-	-	-	-
Recycle position (24-ZT-92743) [%]	30	-	100						
FIC tuning param. (24-FIC-92743)	-	-	-	Gain		Integr.		Derv.	
Vib. DE (23-YI-96305-01) [µm]	30	57	82						
Vib. DE (23-YI-96305-02) [µm]	30	57	82						
Vib. NDE (23-YI-96306-01) [µm]	30	57	82						
Vib. NDE (23-YI-96306-02) [µm]	30	57	82						
Vib. NDE (23-ZI-96307) [µm]	+0,2	+0,5	+0,75						
Temp. DE (23-TI-96301-01) [°C]	50	60	65						
Temp. DE (23-TI-96301-03) [°C]	50	60	65						
Temp. NDE (23-TI-96302-01) [°C]	50	60	65						
Temp. NDE (23-TI-96302-03) [°C]	50	60	65						
Temp. NDE (23-TI-96303-01) [°C]	50	70	85						
Temp. NDE (23-TI-96304-01) [°C]	50	70	85						
Open/Close time (24-ESDV-92939A)	8	-	32	Opening			Closing		
Open/Close time (24-ESDV-92939B)	3	-	6	Opening			Closing		
Open/Close time (25-XV-92861A)	7	-	24	Opening			Closing		
Open/Close time (25-XV-92861B)	3	-	6	Opening			Closing		

TABLE 6.21 3RD STAGE GAS COMPRESSOR

4th Stage Gas Compressor (27-KA-9104)									
Date and time	-	-	-						
	Norm	Alarm	Max	1	2	3	4	5	6
Flowrate (27-FI-92933) [10^3 m^3/h]	30,5	-	42,3						
Molar weig. (27-AI-93022) [kg/kmol]	18,39	-	-						
Inlet pressure (27-PI-92932) [Barg]	47,5	55	58,2						
Outlet pressure (27-PI-92940) [Barg]	105	130	135						
Inlet temperature (27-TI-92933) [°C]	16,1	25	-						
Outlet temp. (27-TI-92938) [°C]	100	120	125						
Power engine [MW]	6,3	-	11,0						
Speed engine (27-NI-96444) [rpm]	1784	-	1802		-	-	-	-	-
Recycle position (27-ZT-92943) [%]	20	-	100						
FIC tuning param. (27-FIC-92943)	-	-	-	Gain		Integr.		Derv.	
Vib. DE (27-YI-96405-01) [µm]	30	57	72						
Vib. DE (27-YI-96405-02) [µm]	30	57	72						
Vib. NDE (27-YI-96406-01) [µm]	30	57	72						
Vib. NDE (27-YI-96406-02) [µm]	30	57	72						
Vib. NDE (27-ZI-96407) [µm]	+0,2	+0,5	+0,75						
Temp. DE (27-TI-96401-01) [°C]	50	60	65						
Temp. DE (27-TI-96401-03) [°C]	50	60	65						
Temp. NDE (27-TI-96402-01) [°C]	50	60	65						
Temp. NDE (27-TI-96402-03) [°C]	50	60	65						
Temp. NDE (27-TI-96403-01) [°C]	50	70	85						
Temp. NDE (27-TI-96404-01) [°C]	50	70	85						
Open/Close time (27-ESDV-92876A)	7	-	28	Opening			Closing		
Open/Close time (27-ESDV-92876B)	3	-	6	Opening			Closing		
Open/Close time (27-ESDV-93019A)	6	-	24	Opening			Closing		
Open/Close time (27-ESDV-93019B)	3	-	6	Opening			Closing		

TABLE 6.22 4TH STAGE GAS COMPRESSOR

Appendices:

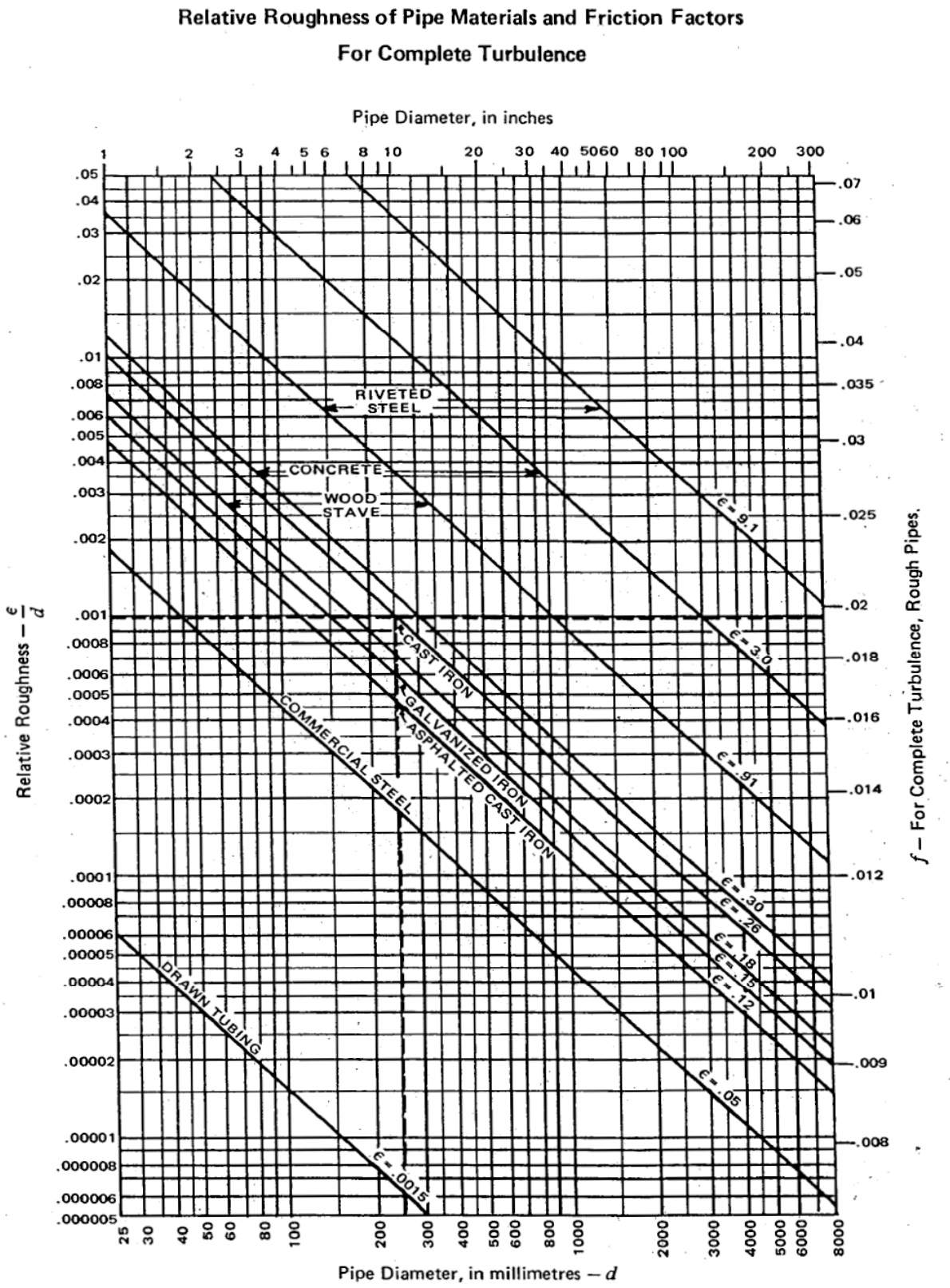

Appendix A. Relative roughness and friction factors

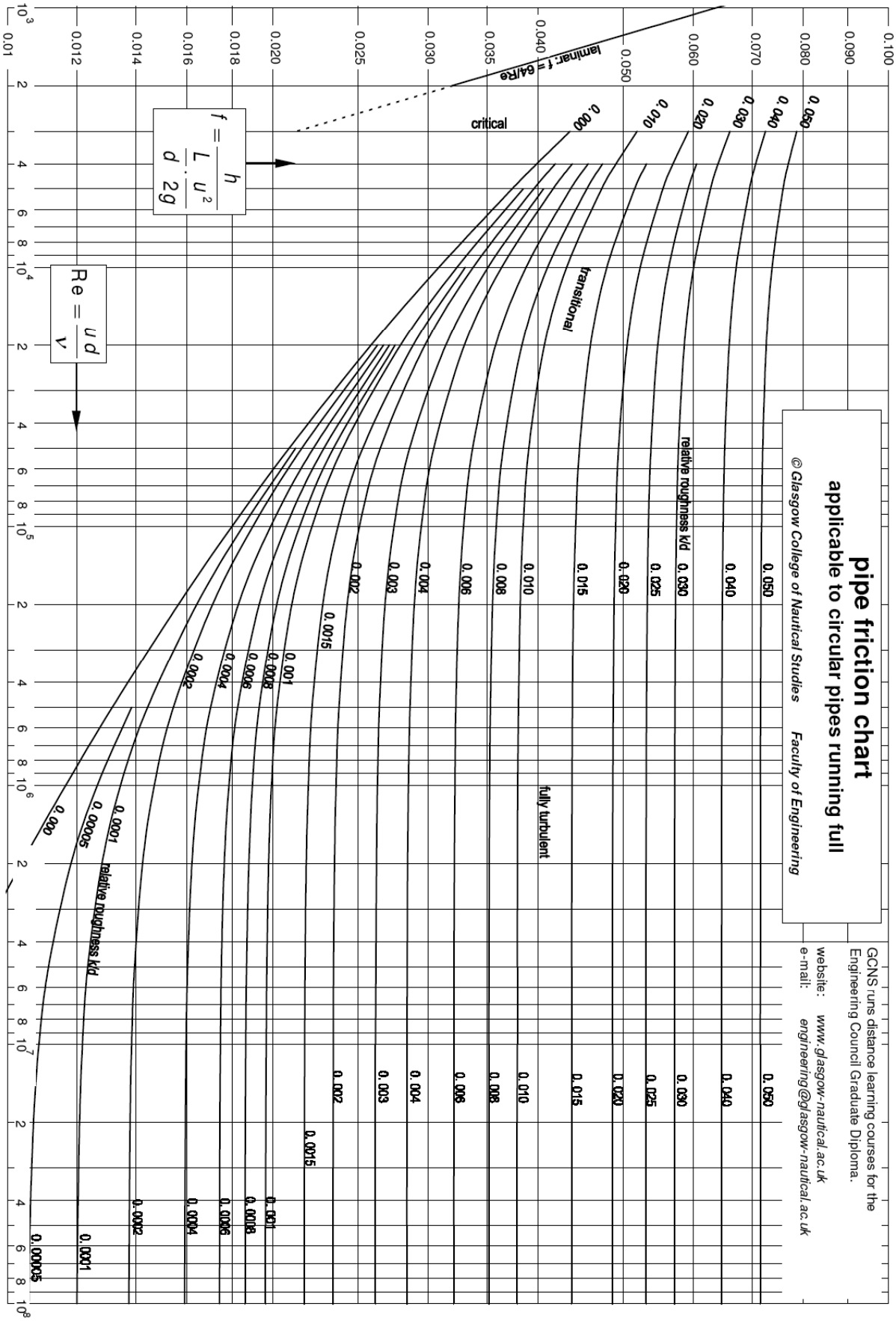

Appendix B. Moody diagram

Appendix C:

This is an example of how to calculate pressure loss in a pipe. In this example it is made references to appendix A and B. For units related to the following calculations, please check *Units* at page 7.

According to the data sheet from the flow valve, the following data is stated:

- The valve has got 10" inlet/outlet size with 8" nominal port size.
- The port area of the valve is A_p=0,03243 m^2.
- The valve has got a C_v= 924 at 100% opening.
- The valve has an equal percentage characteristic.

According to the pump data:

- The pump head is tested to be, H=105 lmc, with a flow of 1000 m^3/h.
- The minimum submerged length of the pump is 10 m.
- The vertical length from the seawater level to the cellar deck is 35 m.
- The vertical length from the cellar deck to the flow valve is 0,8 m.

The piping characteristic of the seawater flow, going trough the flow valve, starts going through the inlet strainer upstream of the pump. On the discharge side of the pump, seawater is flowing horizontally for 4 m, then turns 90° vertically in a tee and takes the last turn upstream the flow valve through a 90° bend.
Downstream the flow valve, the pipe is going vertically upwards for 10 m before turning around and gets dumped to the seawater caisson, which contains atmospheric pressure.

Density of seawater $= 1027 kg/m^3$

Kinematic viscosity seawater at $5^oC = 1{,}519 \cdot 10^{-6} m^2 \cdot s^{-1}$

Maximum differential pressure over the pump at 1000m^3/h:

$$H_1 = 105 lmc = 105 m \cdot 1027 kg/m^3 \cdot 9{,}81 m/s^2 = \underline{1057861 Pa}$$

The maximum static pressure up streams the flow valve:

$$H_2 = 35m + 0{,}8m = 35{,}8m \Rightarrow 35{,}8 \cdot 1027 kg/m^3 \cdot 9{,}81 = \underline{360680 Pa}$$

Pressure loss in pipe, assuming flow of 1000 m^3/h:

$$\Delta p = f \cdot \frac{l}{d} \cdot \frac{v^2 \cdot \rho}{2}$$ (Bird, 2007)

$$\mathrm{Re} = \frac{v \cdot d}{\nu},\ \mathrm{Re} \geq 2600\ \text{(Turbulence)},\ \mathrm{Re} \leq 2599\ \text{(Laminar)}$$ (Bird, 2007)

$$Laminar: f = \frac{64}{\mathrm{Re}} = \frac{64 \cdot \nu}{v \cdot d}$$
$$Turbulence: f = Moodydiagram$$

$\Delta p_1(strainer)$:

$$d_1 = 24" = 0{,}6096m \Rightarrow v_1 = \frac{Q}{A_1} = \frac{\frac{1000m^3/h}{3600s}}{\frac{\pi \cdot (0{,}6096m)^2}{4}} = \frac{0{,}278m^3/s}{0{,}2919m^2} = 0{,}952m/s$$

(McCabe, 1993)

$$\text{Re} = \frac{0{,}952m/s \cdot 0{,}6096m}{1{,}519 \cdot 10^{-6} m^2/s^{-1}} = 388053 \Rightarrow Turbulence$$

$$\text{Relative roughness} = \frac{\varepsilon}{d} = \frac{0{,}05}{609{,}6mm} = 8{,}2 \cdot 10^{-5}$$

Moody diagram $\Rightarrow f_1 = 0{,}022$

Equivalent length of the strainer is found from Nergaard, 2009, and is given as:

$$\frac{l}{d} = 170 \Rightarrow l_1 = 0{,}6096m \cdot 170 = 103{,}6m$$

$$\Delta p_1 = f_1 \cdot \frac{l_1}{d_1} \cdot \frac{v_1^2 \cdot \rho}{2} = 0{,}022 \cdot \frac{103{,}6m}{0{,}6096} \cdot \frac{(0{,}952m/s)^2 \cdot 1027kg/m^3}{2} = \underline{1740Pa}$$

$\Delta p_2(18"\,pipe)$:

$$d_2 = 18" = 0{,}4572m \Rightarrow v_2 = \frac{Q}{A_2} = \frac{0{,}278m^3/s}{\frac{\pi \cdot (0{,}4572m)^2}{4}} = 1{,}693m/s$$

$$\text{Re} = \frac{v_2 \cdot d_2}{\nu} = \frac{1{,}693m/s \cdot 0{,}4572m}{1{,}519 \cdot 10^{-6} m^2/s^{-1}} = 509571 \Rightarrow Turbulence$$

$$\text{Relative roughness} = \frac{\varepsilon}{d} = \frac{0{,}05}{457{,}2mm} = 1{,}09 \cdot 10^{-4}$$

Moody diagram $\Rightarrow f_2 = 0{,}0215$

$l_2 = 4m$

$$\Delta p_2 = f_2 \cdot \frac{l_2}{d_2} \cdot \frac{v_2^2 \cdot \rho}{2} = 0{,}0215 \cdot \frac{4m}{0{,}4572m} \cdot \frac{(1{,}693m/s)^2 \cdot 1027kg/m^3}{2} = \underline{177Pa}$$

$\Delta p_3(12"Tee + 90^o\,bend)$:

$$d_3 = 12" = 0{,}3048m \Rightarrow v_3 = \frac{Q}{A_3} = \frac{0{,}278m^3/s}{\frac{\pi \cdot (0{,}3048m)^2}{4}} = 3{,}81m/s$$

$$\text{Re} = \frac{3{,}81m/s \cdot 0{,}3048m}{1{,}519 \cdot 10^{-6} m^2/s^{-1}} = 764508 \Rightarrow Turbulence$$

$$\text{Relative roughness} = \frac{\varepsilon}{d} = \frac{0{,}05}{304{,}8mm} = 1{,}64 \cdot 10^{-4}$$

Moody diagram $\Rightarrow f_3 = 0{,}0198$

The equivalent length of the tee is found in Crane Co, 1979, and is given as:
$l_3 \Rightarrow 12"$ gives a length of: $11,2m$
The equivalent length of the bend is found in Crane Co, 1979, and is given as:
$l_4 \Rightarrow 12"$ gives a length of: $5,1m$

$$\Delta p_3 = f_3 \cdot \frac{(l_3 + l_4)}{d_3} \cdot \frac{v_3^2 \cdot \rho}{2} = 0,0198 \cdot \frac{(11,2 + 5,1)m}{0,3048m} \cdot \frac{(3,81m/s)^2 \cdot 1027kg/m^3}{2} = \underline{7893Pa}$$

$$H_3 = \Delta p_{tot} = 1740Pa + 177Pa + 7893Pa = \underline{9810Pa}$$

The inlet pressure of the flow valve (pressure upstream) will therefore be:
$p_i = H_1 - H_2 - H_3 = 1057861Pa - 360680Pa - 9810Pa = \underline{687371Pa}$

The outlet pressure of the valve (pressure downstream) will be affected by a 9 m water column, as will function as a backpressure. The seawater is later being dumped into an atmospherically seawater caisson.
The outlet pressure of the valve is assumed to be:
$p_o = \rho \cdot g \cdot h = 1027kg/m^3 \cdot 9,81m/s^2 \cdot 9m = \underline{90673Pa}$

We can now calculate the maximum flow through the flow valve:

$$Q = C_V \cdot A \cdot \sqrt{\frac{\Delta p \cdot 2}{\rho}}$$

(Fisher, 2005)

$$Q = 924 \cdot 0,03243m^2 \cdot \sqrt{\frac{(687371 - 90673)Pa \cdot 2}{1027kg/m^3}} = \underline{\underline{1022m^3/h}}$$

The result we get is a slight lower than expected, but still means that we can use the minimum flow-valve to verify the first points of the left hand side of the characteristics of the pump.

Table 8 — Vibration limits for vertically-suspended pumps

Criteria	Location of vibration measurement	
	Pump thrust bearing housing or Motor mounting flange (see Figure 28)	Pump shaft (adjacent to bearing)
	Pump bearing type	
	All	Hydrodynamic guide bearing adjacent to accessible region of shaft
	Vibration at any flow within the pump's preferred operating region	
Overall	$v_u < 5{,}0$ mm/s RMS (0,20 in/s RMS)	$A_u < (6{,}2 \times 10^6/n)^{0,5}$ µm peak-to-peak [$(10\,000/n)^{0,5}$ mils peak-to-peak] Not to exceed: $A_u < 100$ µm peak-to-peak (4,0 mils peak-to-peak)
Discrete frequencies	$v_f < 0{,}67\ v_u$	$A_f < 0{,}75\ A_u$
Allowable increase in vibration at flows outside the preferred operating region but within the allowable operating region	30 %	30 %

Vibration velocity and amplitude values calculated from the basic limits shall be rounded off to two significant figures

where

- v_u is the unfiltered velocity, as measured;
- v_f is the filtered velocity;
- A_u is the amplitude of unfiltered displacement, as measured;
- A_f is the amplitude of filtered displacement;
- n is the rotational speed, expressed in revolutions per minute.

Appendix D. Vibration limits, vertically-suspended pumps

Table 14 — Performance tolerances

Condition	Rated point %	Shutoff %
Rated differential head:		
— 0 m to 150 m (0 ft to 500 ft)	– 2 + 5	+ 10 – 10 [a]
— 151 m to 300 m (501 ft to 1 000 ft)	– 2 + 3	+ 8 – 8 [a]
— > 300 m (1 000 ft)	– 2 + 2	+ 5 – 5 [a]
Rated power	+ 4 [b]	—
Rated NPSH	0	—

NOTE Efficiency is not a rating value.

[a] If a rising head flow curve is specified (see 5.1.13), the negative tolerance specified here shall be allowed only if the test curve still shows a rising characteristic.

[b] Under any combination of the above (cumulative tolerances are not acceptable)

Appendix E. Performance tolerances, centrifugal pumps

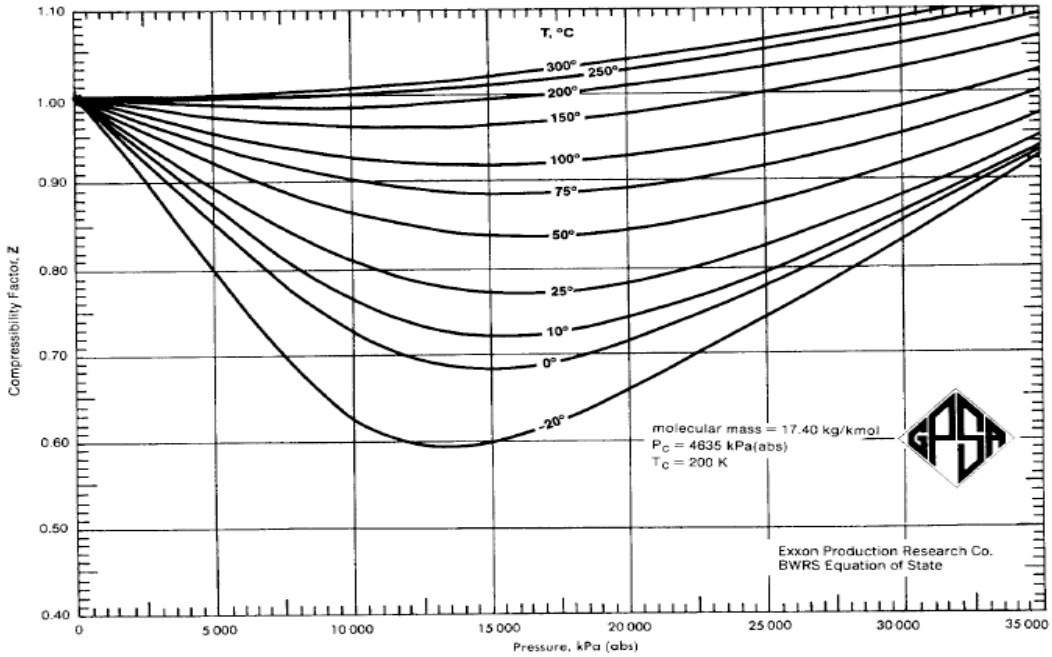

Appendix F. Compressibility factors, natural gases (17,40 kg/kmol)

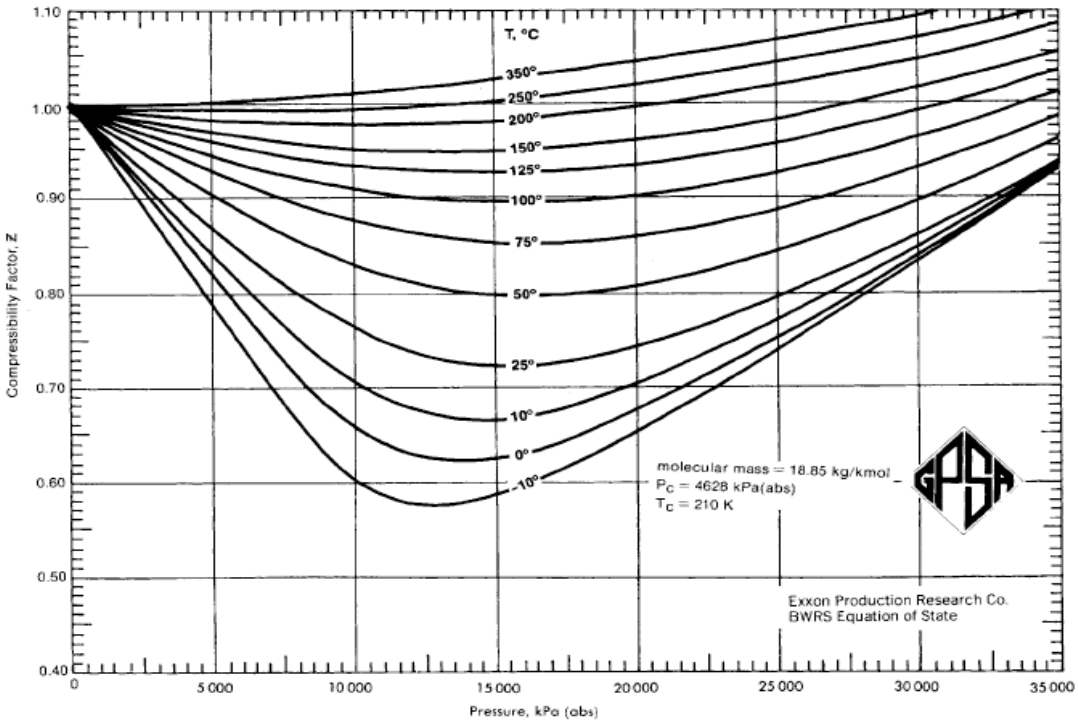

Appendix G. Compressibility factors, natural gases (18,85 kg/kmol)

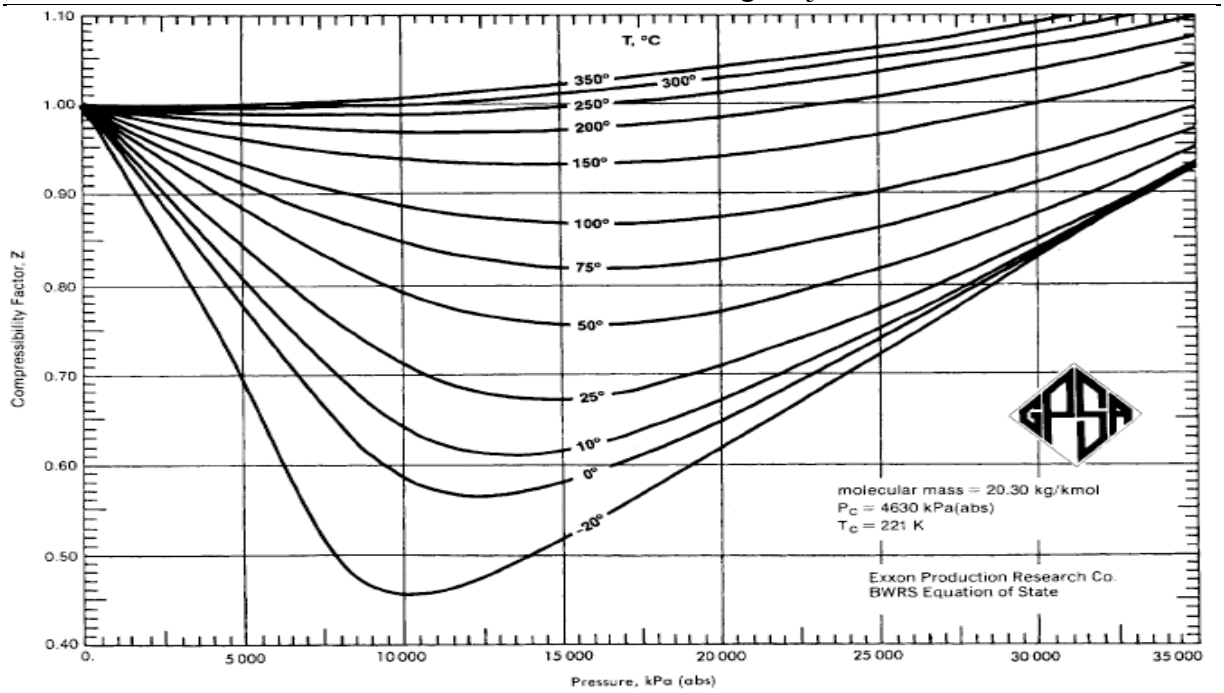

Appendix H. Compressibility factors, natural gases (20,30 kg/kmol)

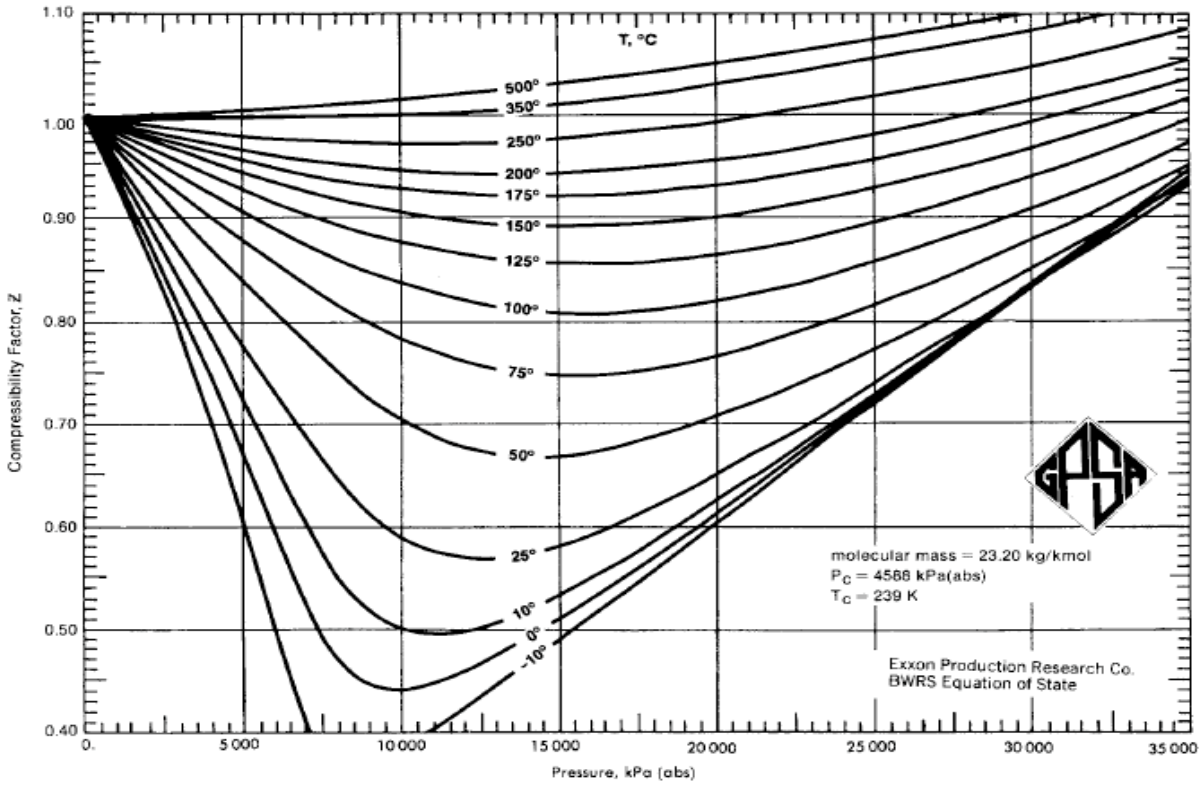

Appendix I. Compressibility factors, natural gases (23,20 kg/kmol)

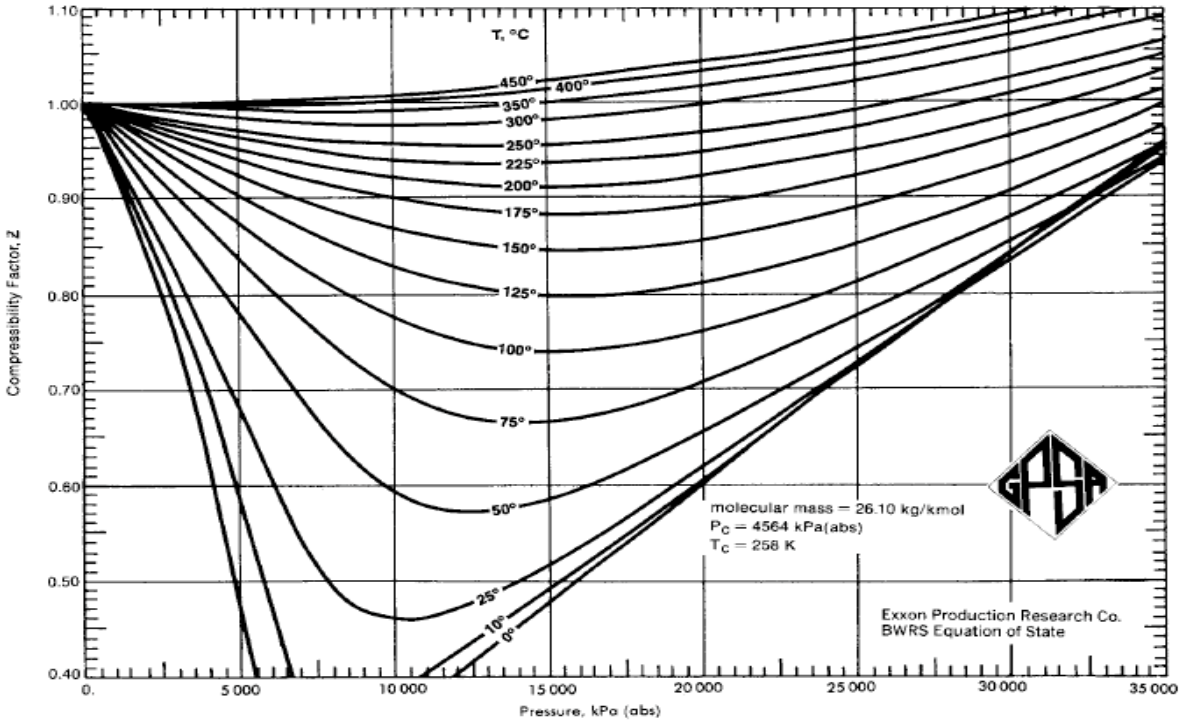

Appendix J. Compressibility factors, natural gases (26,10 kg/kmol)

Appendix K, Cooling Medium Pumps:

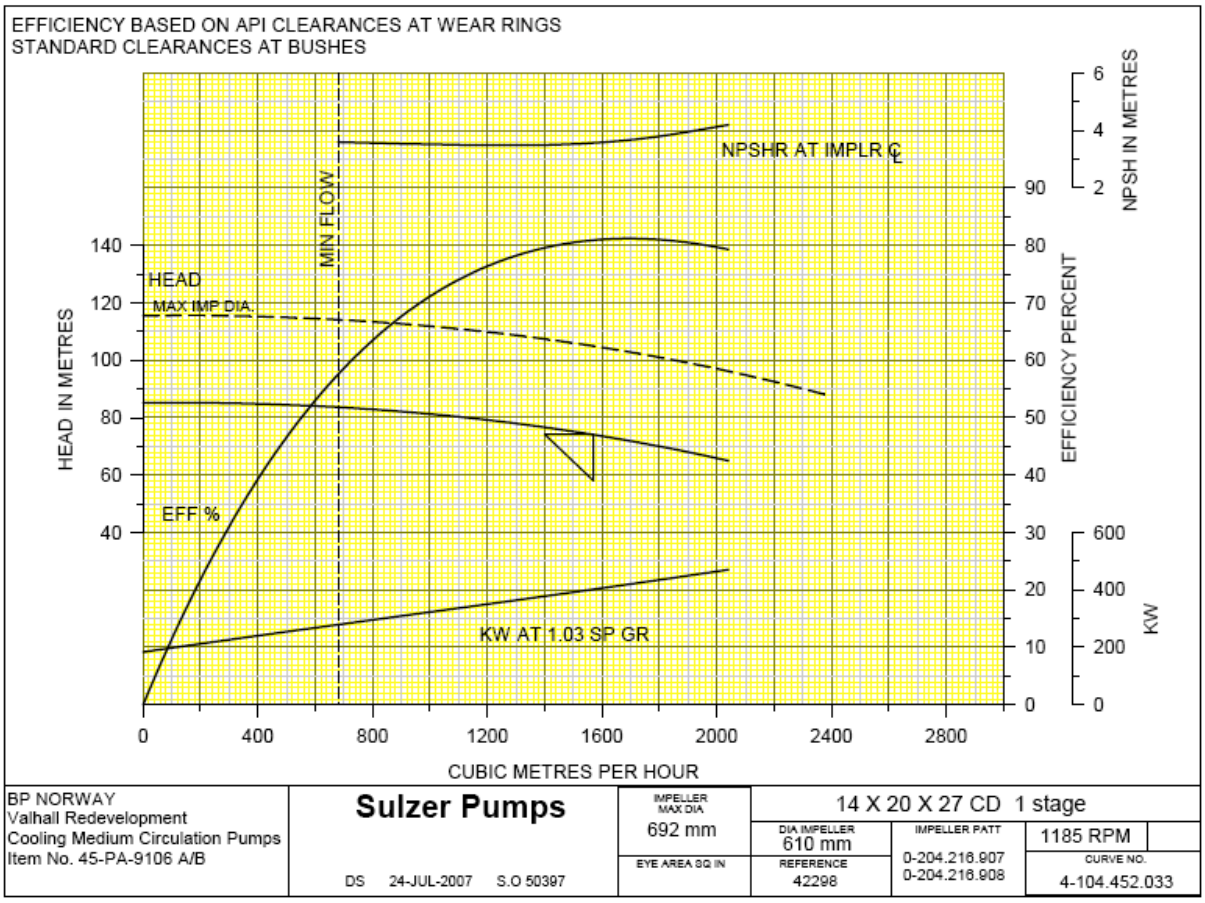

Appendix L, Firewater Pumps:

PERFORMANCE DIAGRAM FOR FRAMO PUMPS

Pump type:	SH500	PB500	Medium:	Sea water	Rated point :	
Imp.drg.no:	436-031-1	2005-128-1	Density:	1026 kg/m3	Flow [m^3/hr]	2300
Imp.diam [mm] :	540	509	Visc:	1 cSt	Head [mlc]	176.8
Speed [rpm] :	1 636	1 850	Temp:	15.5 deg	NPSHr [mlc]	13.7
			Project no:	623607	Power [kW]	1865

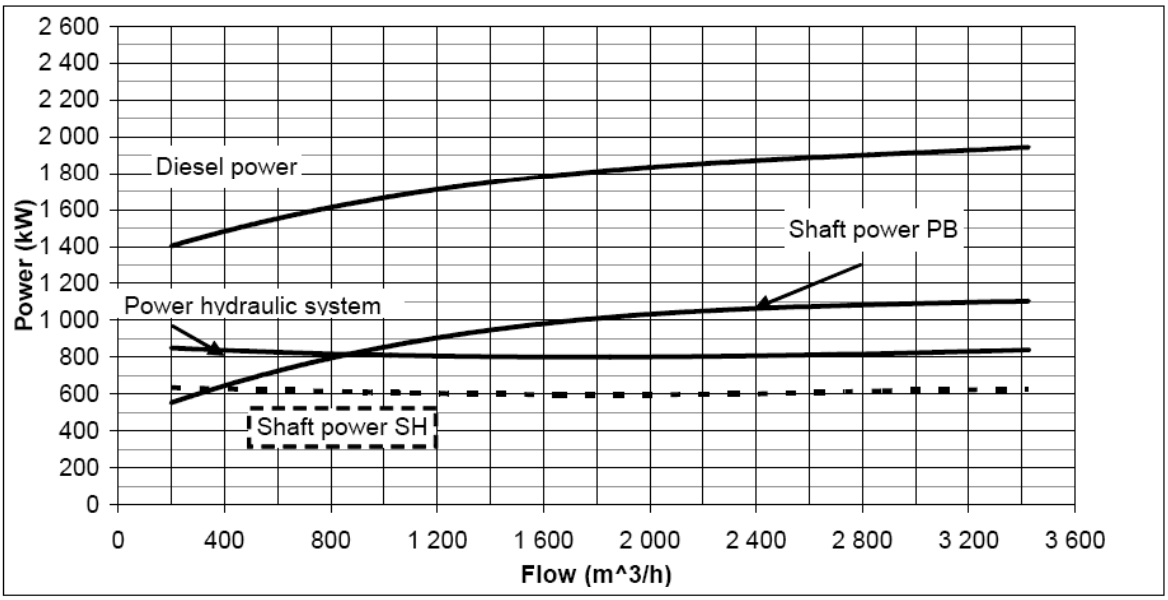

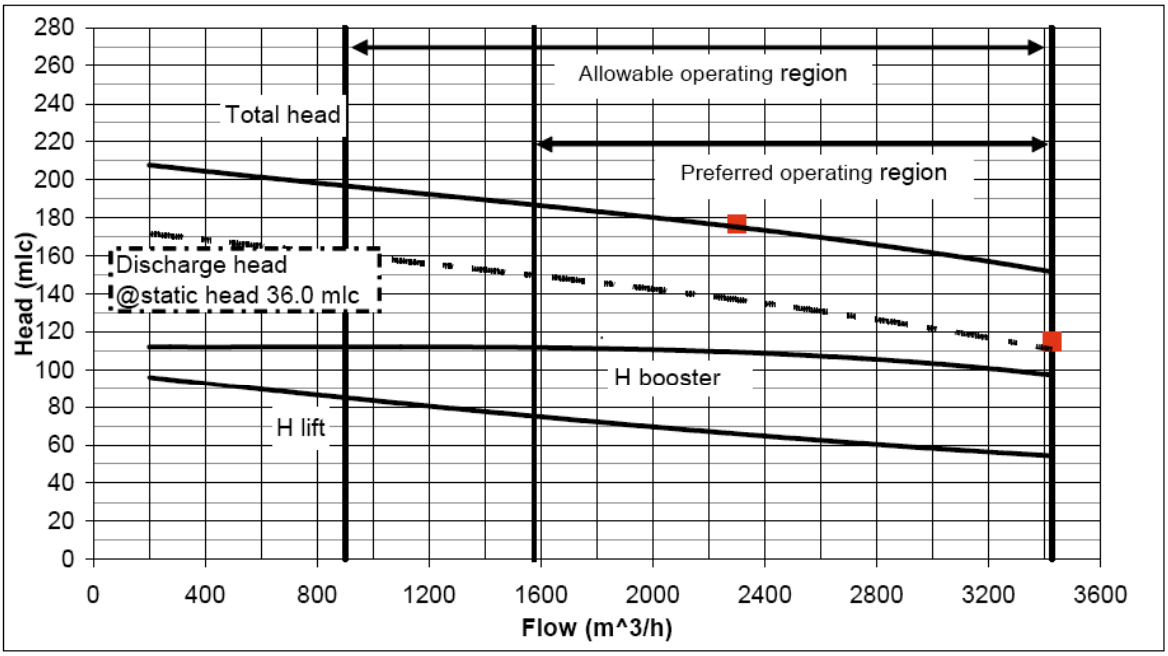

This drawing is the property of FRANK MOHN A/S. It is not to be traced, copyed or published without their written concent, nor to be misused in any way.

FRAMO

	Sign	Date
Constr.	ARy	08.04.08
Checked	SIG	10.04.08

Valhall Redevelopment
FWP Witness
Sno:200871 200873

1674-005-4

Appendix M, Oil Booster Pumps:

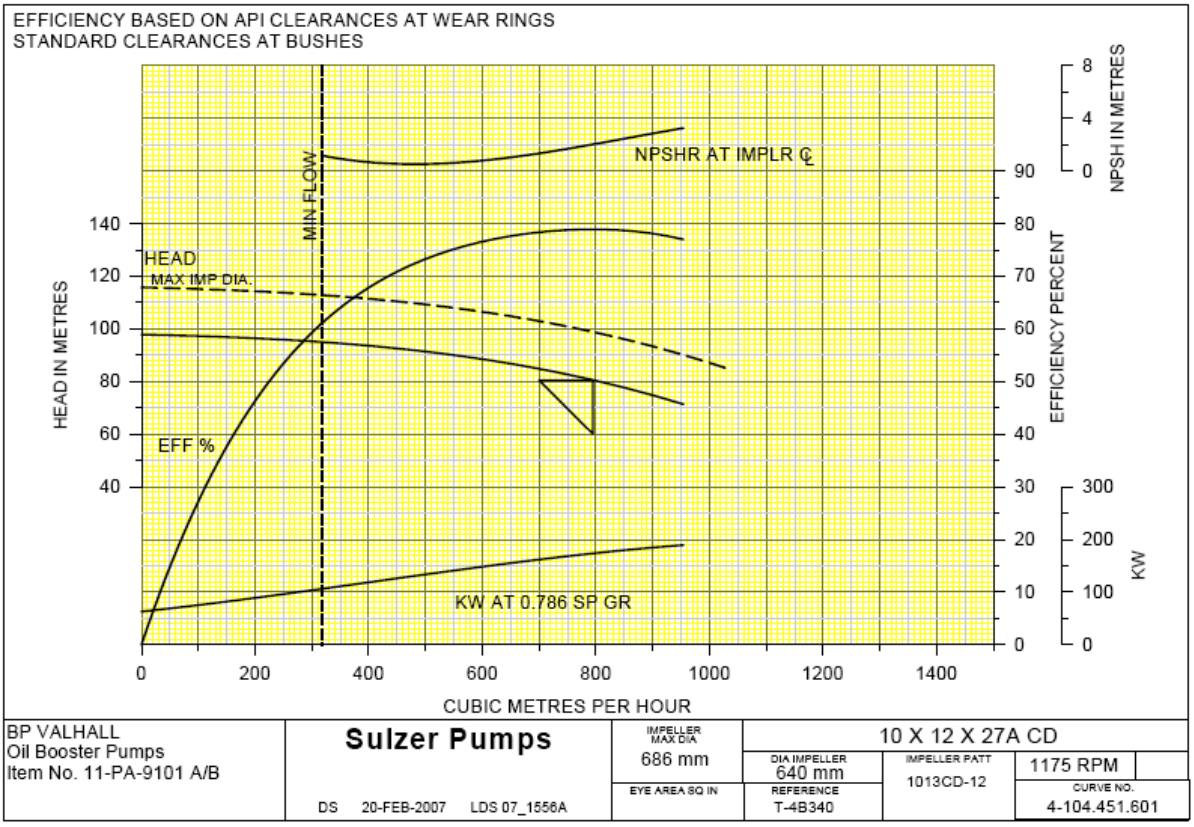

Appendix N, Oil Export Pumps:

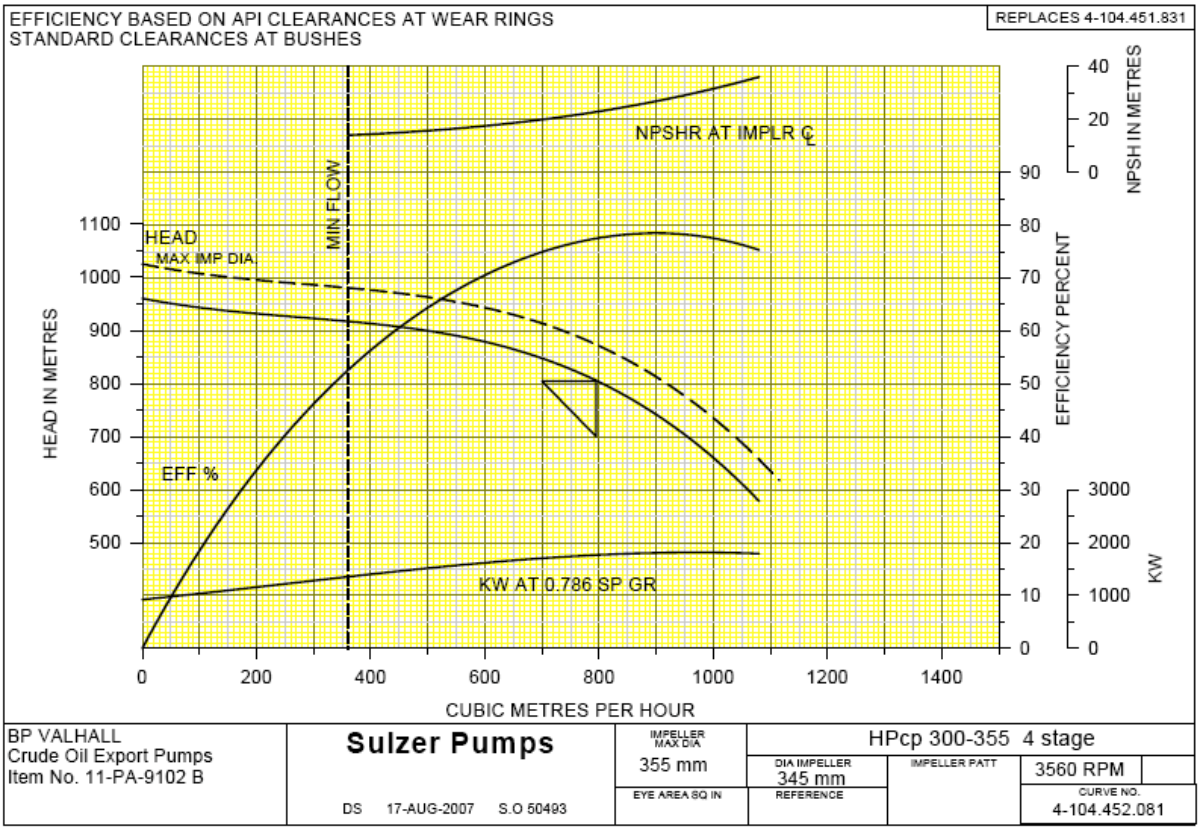

Appendix O, 1st Stage Gas Compressor:

BP Valhall VRD RB71–5

REFERENCE CURVE No	1 (1/min)	CURVE	p1 (barg)	T1 (°C)	R.H.	MW	TW1	N/No	ANGLE (°)
	6273	1	4.370	40.0		22.572		1.00	

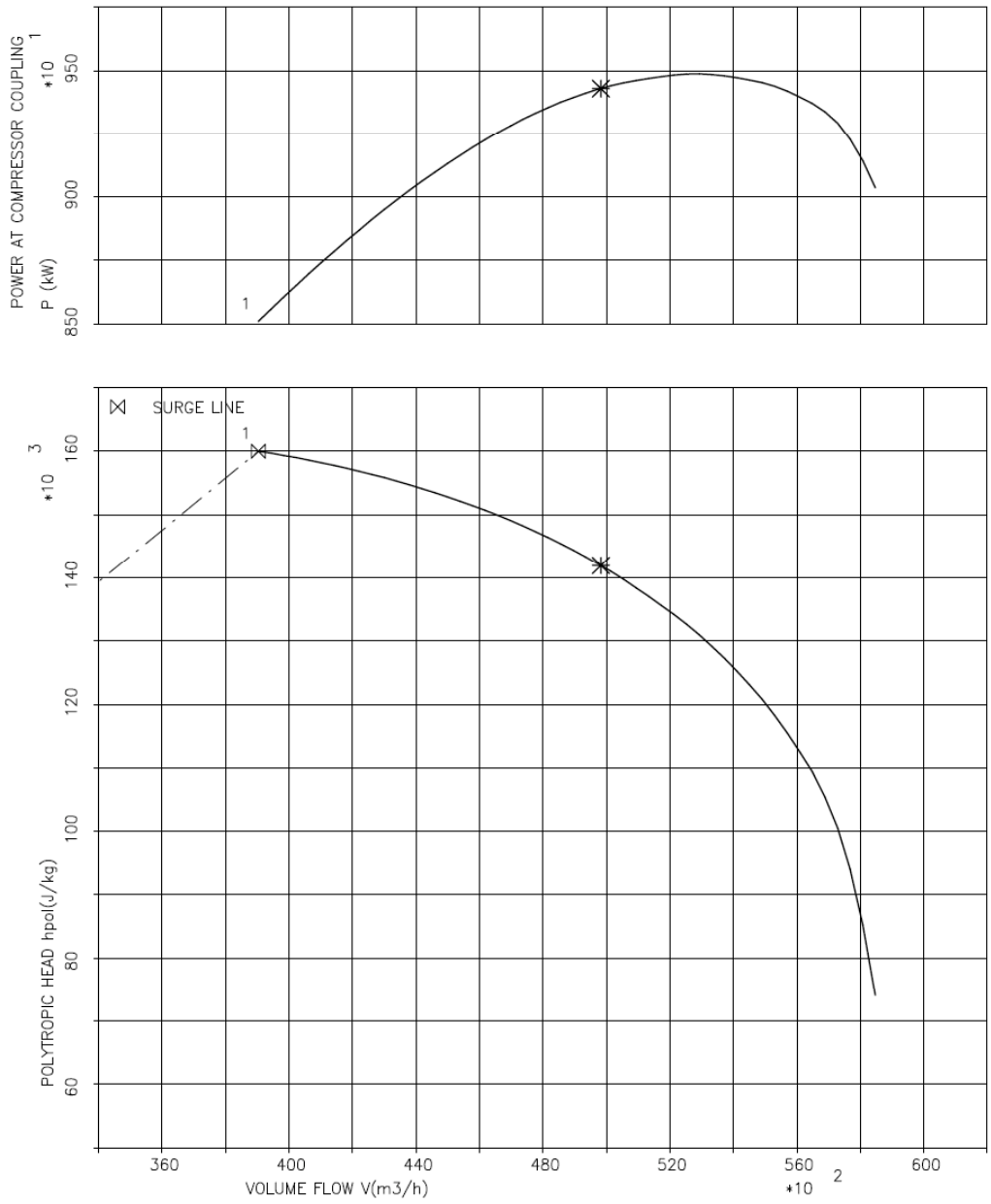

The copyright of these drawings and of all annexes which are entrusted to a person's care always remain the property of our firm. They must not be copied or duplicated nor shown to or placed at the disposal of third persons without our written consent.

MAN TURBO	Dept. SC–6	Name A.Louie	Date 16–OCT–07	Page 1 of
Classification ☐ MAN only ☐ Project ☒ Client ☒ Contract ☐ free Distribution	RB71–5 Stage 1		MAN No H7800005.78	Client No
	Title: Predicted Performance Curves			Document No: 4–837048811 Rev: 2

Appendix P, 2nd Stage Gas Compressor:

BP Valhall VRD RB45–5

REFERENCE CURVE No	CURVE	p1 (bara)	T1 (°C)	R.H.	MW	TW1	N/No	ANGLE (°)
(1/min)								
9562	1	11.88	24.0		22.839		1.00	

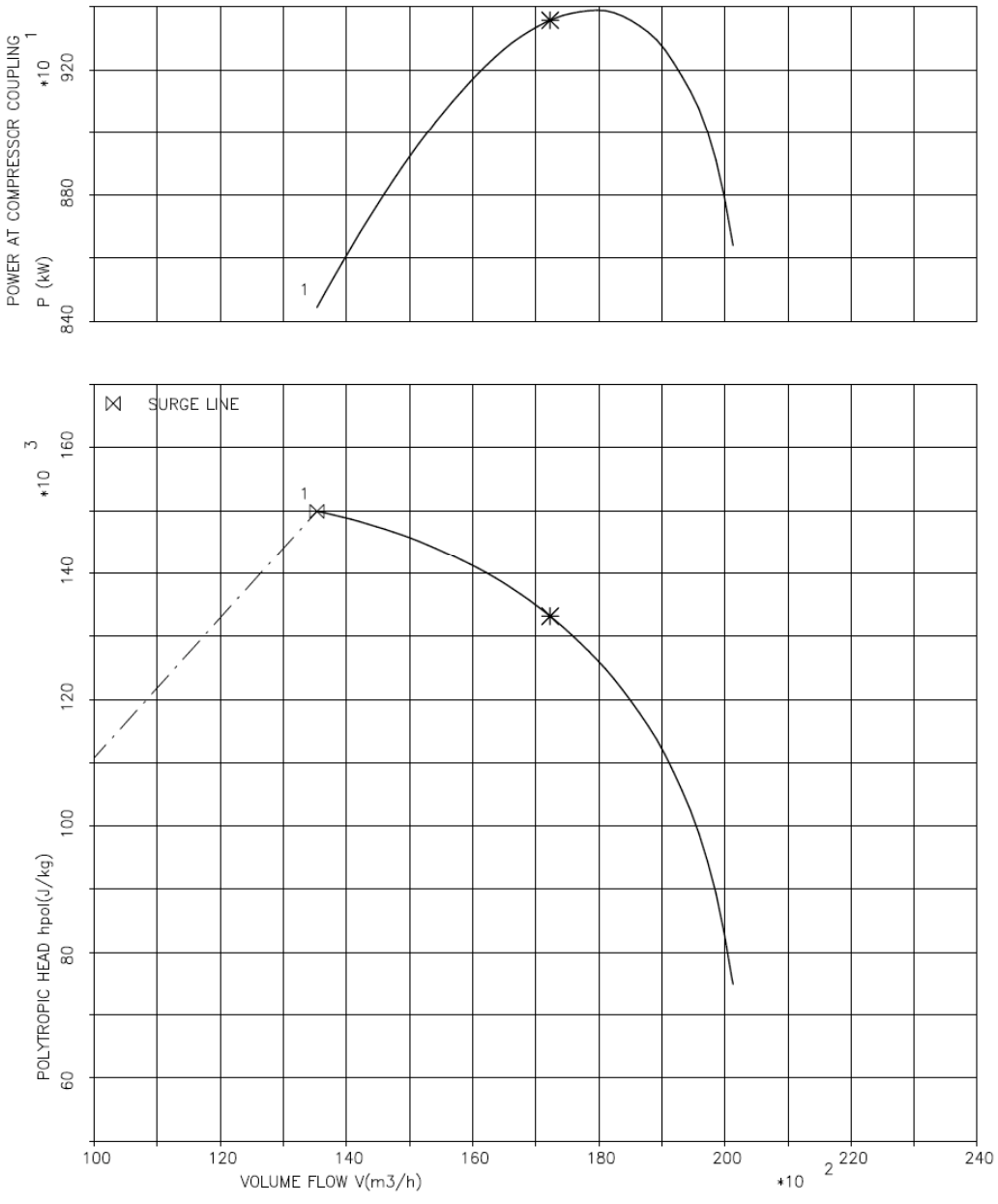

The copyright of these drawings and of all annexes which are entrusted to a person's care always remain the property of our firm. They must not be copied or duplicated nor shown to or placed at the disposal of third persons without our written consent.

MAN TURBO	Dept. SC–6	Name A.Louie	Date 16–OCT–07	Page 3 of
Classification ☐ MAN only ☐ Project ☒ Client ☒ Contract ☐ free Distribution	RB45–5 Stage 2		MAN No H7800005.78	Client No
	Title Predicted Performance Curves			Document No 4–837048811 / Rev 2

Appendix Q, 3rd Stage Gas Compressor:

BP Valhall VRD RB45–3

REFERENCE CURVE No	(1/min)	1 CURVE	p1 (bara)	T1 (°C)	R.H.	MW	TW1	N/No	ANGLE (°)
		9562	1 34.28	18.1		23.857		1.00	

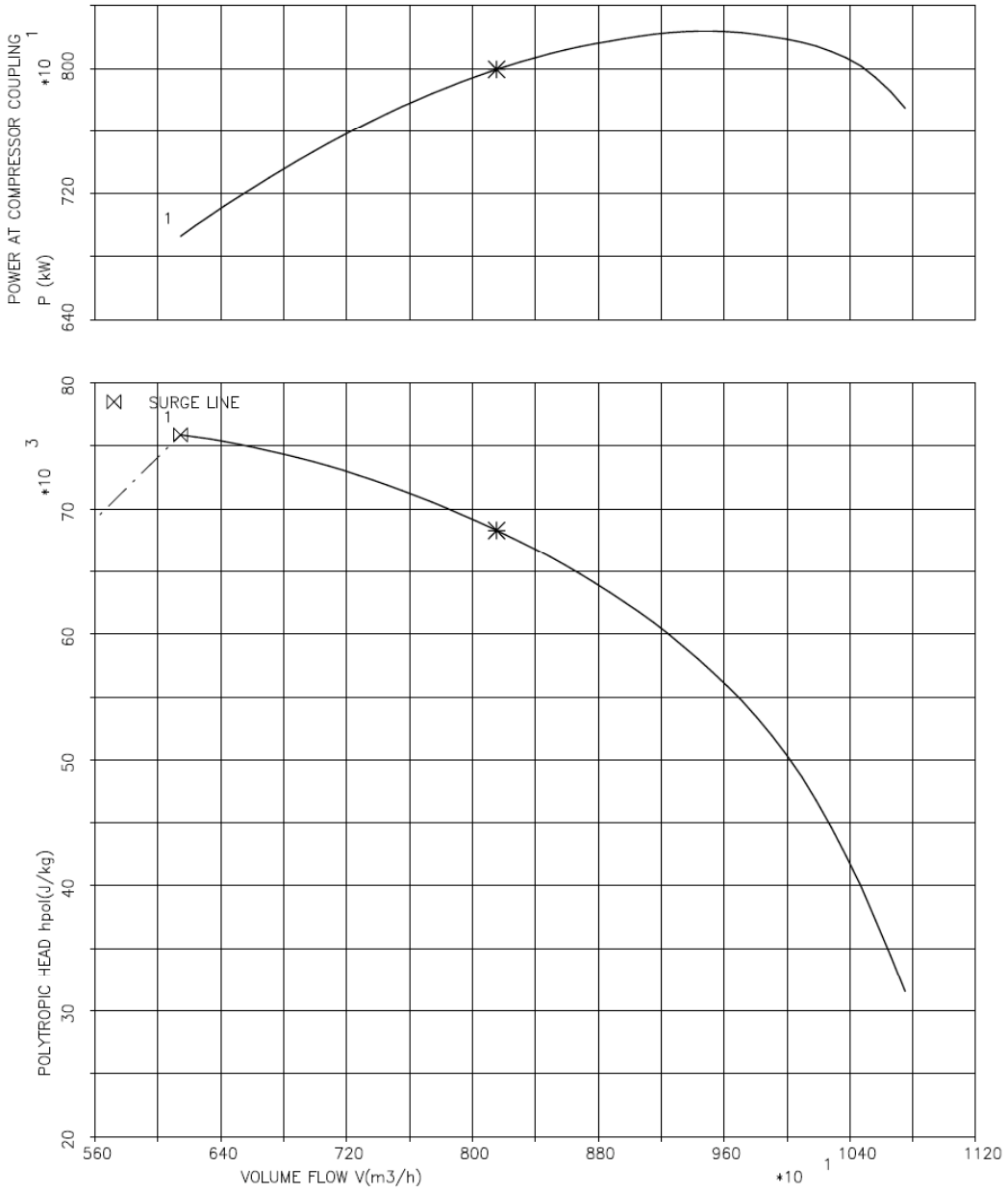

The copyright of these drawings and of all annexes which are entrusted to a person's care always remain the property of our firm. They must not be copied or duplicated nor shown to or placed at the disposal of third persons without our written consent.

MAN TURBO	Dept. SC–6	Name A.Louie	Date 16–OCT–07	Page 5 of
Classification ☐ MAN only ☐ Project ☒ Client ☒ Contract ☐ free Distribution	RB45–3 Stage 3		MAN No H7800005.78	Client No
	Title: Predicted Performance Curves			Document No 4–837048811 / Rev 2

Appendix R, 4th Stage Gas Compressor:

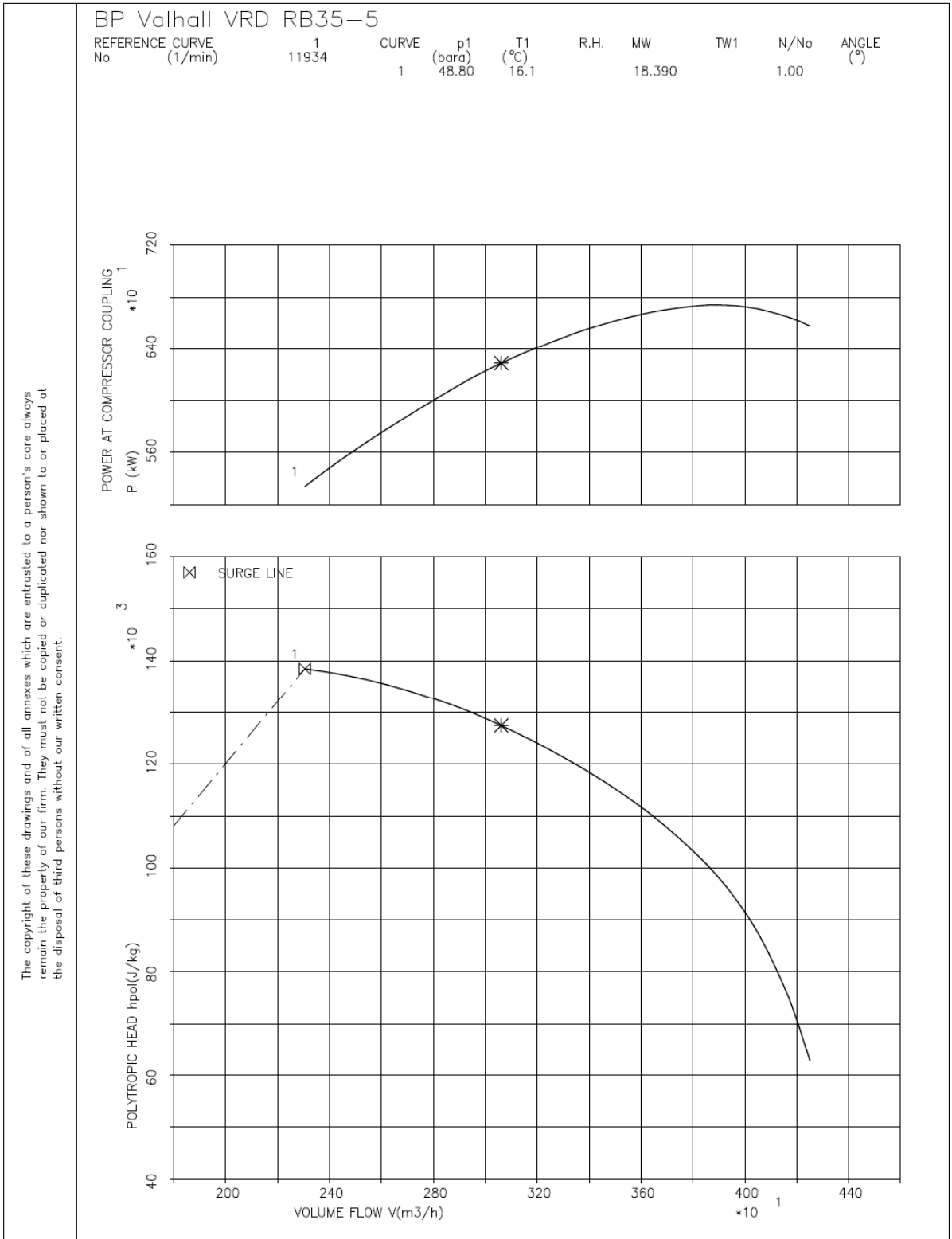

The copyright of these drawings and of all annexes which are entrusted to a person's care always remain the property of our firm. They must not be copied or duplicated nor shown to or placed at the disposal of third persons without our written consent.

MAN TURBO	Dept. SC-6	Name A.Louie	Date 16-OCT-07	Page 7 of
Classification ☐ MAN only ☐ Project ☒ Client ☒ Contract ☐ free Distribution	RB35-5 Stage 4		MAN No H7800005.78	Client No
	Title Predicted Performance Curves			Document No 4-837048811 Rev 2

84-PX-9101A/B
LP SEAWATER LIFT PUMPS

CAPACITY: 2400m³/h AT 3.5 BARG DISCHARGE AT CELLAR DECK (EACH)
DRIVER: 730 KW AT 1180 RPM
(2 X 100%)

FROM 84-XX-9112 ELECTROCHLORINATION GENERATOR
PH-ME-P-0260-001
0200-CS-84L97519-AT75-4C
4C 40 Y
0200-CS-84L97452-AT75-4C
0300-WS-84L97449-AT75-4C (NOTE 9)
4C 40 N
PH-S-1011 SP 209 AIR RELEASE TRAP
0400x300
0400 BALATOR 84-V-99846
0400-WS-84L97450-AT75-4C
HIGH POINT
1800-WS-84L97456-AT75-0
TO 84-CA-9119 LP SEAWATER FILTER
PH-ME-P-0259-001

0075-WS-84L97459-AT75-0
XV 93212A (NOTES 3,4,14) XV108 1800 BUATOR 0075 GTATOOR 84-V-99685
0100 GTATOOR 84-V-99684
FO 93212A
1800 CHATOOR 84-V-99800 (NOTE 6)
PH-S-1000 SP 207 AIR RELEASE (V) TRAP (NOTE 2)
(NOTE 10)
0200-WS-84L97458-AT75-4C
PI 93207A PT 93207A 0150 CBATIOW 84-V-90801
0200 GTATOR 84-V-90685
0075 GTATOOR 84-V-99681
FI 93201A (NOTE 14) (NOTE 8)
TI 93207A TT 93207A 0150
1800-WS-84L97456-AT75-0
1200-WS-84L97457-AT75-8C
0200x0100
0100 GTATOOR 84-V-99682
PX 9101A-M05
(NOTES 3,4,14) XV 93202A XV106 0200 GTATOR
PMS P E
0100 GTATOOR 84-V-99683
(NOTE 11) FT 93207A FIC 93207A
T 951B FIELD INSTALL T 951A
FCL 93207A (NOTE 7,14)
1200x1000 1000 0 8C
FV 93207A TITANIUM
CARBON STEEL 1200 BUATOR 84-V-90855
TITANIUM
SP 327 FLANGE ISOLATION KIT PH-S-2404
(NOTE 15)
M05
FIELD INSTALL 950A 950B
84-PX-9101A (NOTE 13)
EL. -50M (NOTE 1)

0075-WS-84L97463-AT75-0
XV 93212B (NOTES 3,4,14) XV108 1800 BUATOR 0075 GTATOOR 84-V-99687
0100 GTATOOR 84-V-99689
FO 93212B
1800 CHATOOR 84-V-99802 (NOTE 6)
PH-S-1001 SP 207 AIR RELEASE (V) TRAP (NOTE 2)
(NOTE 10)
0200-WS-84L97462-AT75-4C
PI 93207B PT 93207B 0150 CBATIOW 84-V-90803
0200 GTATOR 84-V-90686
0075 GTATOOR 84-V-99686
FI 93201B (NOTE 14) (NOTE 8)
TI 93207B TT 93207B 0150
1800-WS-84L97460-AT75-0
1200-WS-84L97461-AT75-8C
0200x0100
0100 GTATOOR 84-V-99687
PX 9101B-M05
(NOTES 3,4,14) XV 93202B XV106 0200 GTATOR
PMS P E
0100 GTATOOR 84-V-99688
(NOTE 11) FT 93207B FIC 93207B
T 953B FIELD INSTALL T 953A
FCL 93207B (NOTE 7,14)
1200x1000 1000 0 8C
FV 93207B TITANIUM
CARBON STEEL 1200 BUATOR 84-V-90804
TITANIUM
SP 327 FLANGE ISOLATION KIT PH-S-2405
(NOTE 15)
M05
FIELD INSTALL 952A 952B
0075 GTATOOR 84-V-99724
84-PX-9101B (NOTE 13)
EL. -50M (NOTE 1)

8C 100 N
1200-WS-84L97457-AT75-8C
TO LP SEAWATER DUMP CAISSON
PH-ME-P-0259-003
8C 100 N
(NOTE 15)
(NOTE 12, 15)

NOTES:
1. SEAWATER LIFT PUMPS CAISSON TERMINATING AT 50M BELOW L.A.T.
2. AIR RELEASE VALVE / VACUUM BREAKER 2", VENDOR SUPPLY, TO BE MOUNTED VERTICALLY.
3. VALVE TO CLOSE IF CORRESPONDING SEAWATER LIFT PUMPS STOPS.
4. VALVE TO OPEN AUTOMATICALLY AFTER START-UP OF CORRESPONDING SEAWATER LIFT PUMP.
5. DELETED.
6. NON / SLAM CHECK VALVES.
7. INDIVIDUAL TRIP ON CORRESPONDING PUMP IF FLOW LESS THAN FCL. ATER PUMP STARTUP SEQUENCE.
8. FLOW DIRECTION TO BE VERTICAL UP. PROVIDE 10D UPSTREAM AND 5D DOWNSTREAM.
9. ROUTE TO SAFE LOCATION.
10. AIR RELEASE VALVE/VACUUM BREAKER SHALL BE LOCATED AT THE HIGHEST POSSIBLE LOCATION AND AS CLOSE TO THE DISCHARGE BLOCK VALVE AS POSSIBLE.
11. MAGMETER. PROVIDE 5D UPSTREAM AND 2D DOWNSTREAM.
12. PIPE WORK TO RISE TO HIGH POINT MINIMUM 5M ABOVE FV-93207A/B.
13. FOR CONDITION MONITORING INSTRUMENTATION, SEE DWG. PH-ME-P-0107-004/005.
14. REFER TO DOCUMENT VRD-ME-P-0042 FOR OPERATING DETAILS.
15. PIPING DOWNSTREAM OF 84-V-90855/90804 TO BE SCH 40S MINIMUM FOR A MINIMUM DISTANCE OF 10 DIAMETERS.

Field for file specification:
Field for date and time :

REV	DATE	BY	DESCRIPTION	CHK	ENGR	APPR	CLIENT
5	08SEP09	JDK	RE-ISSUED FOR CONSTRUCTION	RAK	RK/JL/PS	GMK	
4	22MAY09	JDK	RE-ISSUED FOR CONSTRUCTION	SRK	RK/JB/JL	GMK	
3	03DEC08	CDB	RE-ISSUED FOR CONSTRUCTION	SRK	RK/PS/JL	DR	
2	28APR08	JDK	RE-ISSUED FOR CONSTRUCTION	SRK	JC/JL/PS	SVS	
1	15APR08	JDK	RE-ISSUED FOR CONSTRUCTION	SRK	JC/JL/JB	RB	
0	010CT07	JDK	ISSUED FOR CONSTRUCTION	SRK	JC/ES/JB	SVS	

Wood Group Engineering (North Sea) Ltd.
MUSTANG INTERNATIONAL, LP
HOUSTON, TEXAS
PROJECT NO. 10910

bp

VALHALL
RE-DEVELOPMENT PROJECT
PIPING & INSTRUMENT DIAGRAM
LP SEAWATER LIFT PUMPS

REGISTRATION CODES			DRAWING NO.						SCALE
AREA	SYSTEM	TYPE	FACILITY CODE	ORIG.	DISP.	SEQ. No.	SHEET		NONE
U12-02	84	XB	PH	ME	P	0258	001	REV. 5	

A1

MEI Project: 10910 - I:\10910\PID\WORKING P&ID FOLLOW-ON 2009\PH-ME-P-0259-001.DWG 06OCT09 0822 SF 25.40 IMP J1KELLE

84-XX-9132
SEAWATER FILTER SKID

84-CA-9119
LP SEAWATER FILTER
SIZE: 1.2m O.D. x 3.89m OAL
OPER.: 3.5 BARG AT 13.5°C
DESIGN: 14 BARG AT 50°C
CAPACITY: 2400 M3/H
MOTOR: 55 KW AT 1700 RPM
(1 x 100%)

84-XX-9132
SKID LIMITS

1.5G3 FIRE SET AT 14 BARG
84 PSV 93224A
0300 BLA10R
84 HV 93224A-03 (NOTE 3,5)
0075 GTA10DR 84-V-90868
0075 (0200x0075) GTA10DR 84-V-90869
(NOTE 3,5) 84 HV 93224A-01
0150 GTA10R
0200x0150
4C 40 Y
0300-WS-84L97473-AT75-0
1100 (DO NOT POCKET)
0300-WS-84L97473-AT75-0 TO OVERBOARD PH-ME-P-0259-005
CONT. ON DWG. PH-ME-P-0259-005

84 PDT 93221
PCS PDC 93221 BACKWASH AT 0.5 BARG
(NOTE 2) PCS HS 93221
PCS XC 93221 (NOTE 1)
PCS CA 9119-M01
P
84-CA-9119
TRIM: 0200-WS-84L97583-AT75-4C (NOTE 5)
M01
0075 GTA10DR 84-V-90870 (NOTE 6)
0200
0200-WS-84L97534-AT75-4C (DO NOT POCKET)
0300x0200

RESIDUAL CHLORINE LP SEAWATER
PCS AI 93223 L
RESIDUAL CL2 HP SEAWATER
PCS AI 93493 L
DATA VALID PCS AA 93234
FAULT PCS AA 93235
84 AS 93223A/B
84 AT 93223
84 AT 93493
1/4" O.D. TUBING (NOTE 4)
(DO NOT POCKET)
1/4" O.D. TUBING

84 TI 93225
84 TT 93225
84 AE 93223
BLEED RING PH-S-0070 SP 12
0075 GTA10DR 84-V-90874
0150
0220 GTA10DR 84-V-90809
0150 GTA10DR 84-V-90810
0150 GTA10DR 84-V-90811
84 PT 93223
84 PT 93224
PI 93223 L
PI 93224 LL
TO 45-HB-9101A/B COOLING MEDIUM SEAWATER COOLERS
PH-ME-P-0264-001
1800-WS-84L97475-AT75-0

1800 2400x1800 BUAT20R 84-V-90808
1800-WS-84L97471-AT75-0
TITANIUM CARBON STEEL TITANIUM
1800 BUAC05R 84-V-90857
SP 328 PH-S-2407 FLANGE ISOLATION KIT

BLEED RING PH-S-0069 SP 12
0075 GTA10DR 84-V-90867
0200 GTA10DR 84-V-90805
FROM 84-PX-9101A/B LP SEAWATER LIFT PUMPS PH-ME-P-0258-001
1800-WS-84L97456-AT75-0
1800-WS-84L97469-AT75-0
1800 BUAT20R 84-V-90806 2400x1800
0075 GTA10DR 84-V-90866
0075 GTA10DR 84-V-90865
SAMPLING POINT
TITANIUM CARBON STEEL TITANIUM
1800 BUAC05R 84-V-90856
SP 328 PH-S-2406 FLANGE ISOLATION KIT

0800 INSP. PORT
0800 BUAT20R 84-V-90804
PCS XV 93229A
84 XV 93229A
0300 4C 30 N
XV108 0300 BLA10R
0300-WS-84L97476-AT75-4C
0200
0200x0075
0075 GTA10DR 84-V-90871 (NOTE 5)

FROM 84-AE-93493 PH-ME-P-0259-005
1/4" O.D. TUBING (NOTE 4)
CONT. ON DWG. PH-ME-P-0259-005

84 FO 93224
CLEAN OUT CONNECTION
TITANIUM CARBON STEEL TITANIUM
0600 BUAC05R 84-V-90807
0075 GTA10DR 84-V-90872
SP 325 PH-S-2400 FLANGE ISOLATION KIT
0600-WS-84L97474-AT75-0
1100 (DO NOT POCKET)
1/4" TUBING AT75
0150 GTA10DR 84-V-87029
0600-WS-84L97477-AT75-0 TO LP SEAWATER DUMP CAISSON PH-ME-P-0259-003

PH-S-1911 SP 191
1800-WS-84L97470-AT75-0
0100 GTA10DR 84-V-90873

NOTES:
1. AUTOMATIC BACKFLUSHING TO BE INITIATED AT HIGH DIFFERENTIAL PRESSURE OR TRIGGERED BY A TIMER.
2. MANUAL INITIATION OF BACKFLUSH.
3. KEY INTERLOCKED VALVE.
4. TUBING PURCHASED WITH PRE-FITTED INSULATION AND HEAT TRACING.
5. FILTER 84-CA-9119 TO BE DRAINED OF WATER BEFORE ISOLATION OF 84-PSV-93224A.
6. VENT VALVE TO BE INSULATED BUT NOT ELECTRIC TRACED.

Field for file specification:
Field for date and time :

REV	DATE	BY	DESCRIPTION	CHK	ENGR	APPR	CLIENT
5	06OCT09	JDK	RE-ISSUED FOR CONSTRUCTION	RAK	RK/JL/PS	GMK	
4	22MAY09	JDK	RE-ISSUED FOR CONSTRUCTION	SRK	RK/JB/JL	GMK	
3	01OCT08	JDK	RE-ISSUED FOR CONSTRUCTION	SRK	RK/PS/JL	SVS	
2	28APR08	JDK	RE-ISSUED FOR CONSTRUCTION	SRK	JC/JL/PS	SVS	
1	15APR08	JDK	RE-ISSUED FOR CONSTRUCTION	SRK	JC/JL/JB	RB	
0	01OCT07	JDK	ISSUED FOR CONSTRUCTION	SRK	JC/ES/JB	SVS	

Wood Group Engineering (North Sea) Ltd.
MUSTANG INTERNATIONAL, LP
HOUSTON, TEXAS
PROJECT NO. 10910

bp

VALHALL
RE-DEVELOPMENT PROJECT
PIPING & INSTRUMENT DIAGRAM
LP SEAWATER FILTER

REGISTRATION CODES			DRAWING NO.					SCALE
AREA	SYSTEM	TYPE	FACILITY CODE	ORIG.	DISP.	SEQ. No.	SHEET	NONE
U12-02	84	XB	PH	ME	P	0259	001	REV. 5

A1

45-XX-9133
COOLING MEDIUM SKID

45-HB-9101A/B
COOLING MEDIUM SEAWATER COOLERS
DUTY: 50,800 KW (EACH)
DESIGN: COOLING MEDIUM 14.5 BARG AT 127°C
OPER: COOLING MEDIUM 10.7 BARG AT 53.8°C
DESIGN: SEAWATER 14.5 BARG AT 127°C
OPER: SEAWATER 3.5 BARG AT 13.6°C
MATERIAL: TITANIUM
(2 x 100%)

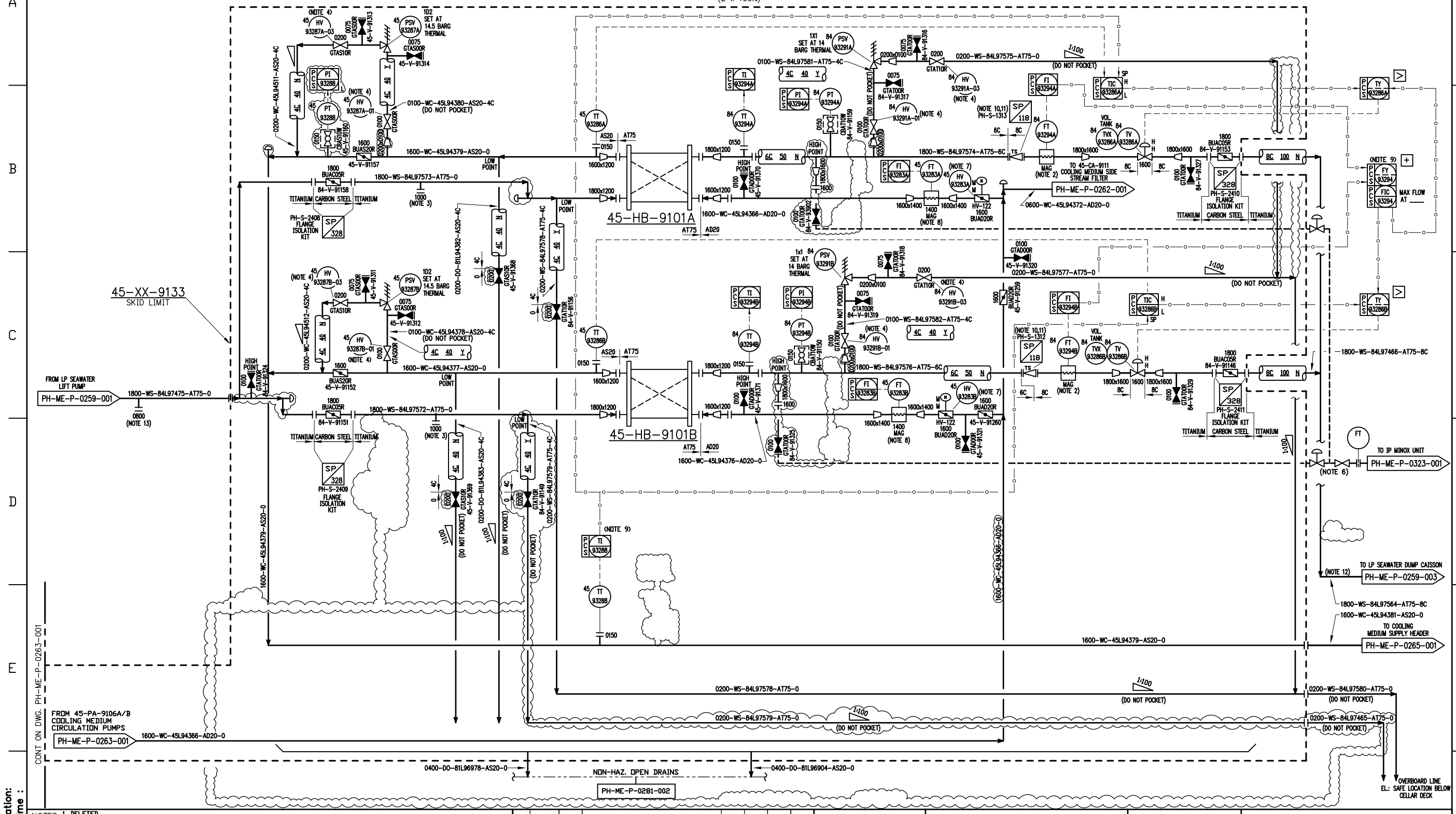

Field for file specification:
Field for date and time :

NOTES:
1. DELETED.
2. PROVIDE 5D UPSTREAM & 2D DOWNSTREAM.
3. CONNECTION PROVIDED TO ALLOW THE DISCHARGE OF REVERSE FLOW SEAWATER THROUGH OFFLINE COOLER FOR CLEANING PURPOSES.
4. KEY INTERLOCKED VALVES.
5. DELETED.
6. TEMPERATURE CONTROL AND SYSTEM OPERATION TO BE DEVELOPED IN THE FUTURE.
7. ACTUATION GEARING TO BE NO FASTER THAN 2.0 MINUTES STROKE TIME.
8. MAGNETIC FLOWMETERS DOWNSTREAM OF CONCENTRIC REDUCERS. PROVIDE STRAIGHT RUN OF 0D UPSTREAM AND 0D DOWNSTREAM.
9. TI-93288 AND FIC-93294 PROVIDE COMMON HEADER TEMP CONTROL AND MAX FLOW CONTROL DURING EXHCANGER CHANGEOVER.
10. STRAINER FOR CONTROL VALVE TRIM MUST BE REMOVED AFTER FULL FLOW COMMISSIONING.
11. PIPE SPOOL TO INCLUDE LIFTING LUGS PENETRATING INSULATION.
12. PIPEWORK TO RISE TO HIGH POINT MINIMUM 4500mm ABOVE 84-TV-93286A/B.
13. CONNECTIONS FOR FUTURE OIL EXPORT COOLER C11-HA-9104J AT 6353 Kw RATING.

REV	DATE	BY	DESCRIPTION	CHK	ENGR	APPR	CLIENT
5	16OCT09	JDK	RE-ISSUED FOR CONSTRUCTION	RAK	RK/JL/MR	GMK	
4	22MAY09	JDK	RE-ISSUED FOR CONSTRUCTION	SRK	RK/JB/JL	GMK	
3	01OCT08	JDK	RE-ISSUED FOR CONSTRUCTION	SRK	RK/PS/JL	SVS	
2	28APR08	JDK	RE-ISSUED FOR CONSTRUCTION	SRK	JC/JL/PS	SVS	
1	15APR08	JDK	RE-ISSUED FOR CONSTRUCTION	SRK	JC/JL/JB	RB	
0	01OCT07	JDK	ISSUED FOR CONSTRUCTION	SRK	JC/ES/JB	SVS	

Wood Group Engineering (North Sea) Ltd.

MUSTANG INTERNATIONAL, LP
HOUSTON, TEXAS

PROJECT NO. 10910

bp

VALHALL
RE-DEVELOPMENT PROJECT
PIPING & INSTRUMENT DIAGRAM
COOLING MEDIUM SEAWATER COOLERS

REGISTRATION CODES			DRAWING NO.					SCALE
AREA	SYSTEM	TYPE	FACILITY CODE	ORIG.	DISP.	SEQ. No.	SHEET	NONE
U12-02	45	XB	PH	ME	P	0264	001	REV. 5

A1

FROM EMERGENCY/ESSENTIAL GENERATOR A
PH-ME-P-0318-002
0400-WS-84L97562-AT75-0
1:100 (DO NOT POCKET)

E. GEN. 1 PSV
PH-ME-P-0259-002
0400-WS-84L97620-AT75-0
1:100 (DO NOT POCKET)

E. GEN. 2 PSV
PH-ME-P-0259-002
0400-WS-84L97622-AT75-0
1:100 (DO NOT POCKET)

FROM EMERGENCY/ESSENTIAL GENERATOR B
PH-ME-P-0319-002
0400-WS-84L97563-AT75-0
1:100 (DO NOT POCKET)

VSD COOLER PSV'S
PH-ME-P-0259-002
0400-WS-84L97505-AT75-0
1:100 (DO NOT POCKET)

FROM POTABLE WATER MAKER PACKAGE
PH-ME-P-0324-001
0400-WS-84L97561-AT75-0
1:100 (DO NOT POCKET)

FROM FIREWATER RING MAIN
PH-ME-P-0292-001
0300-WS-84L97565-AT75-0
1:100 (DO NOT POCKET)

HELIDECK FW WINTERIZATION DRAIN
PH-ME-P-0324-002
0200-DO-81L96898-AT75-0

0800

0800-WS-84L97464-AT75-0

BACKWASH FROM 84-CA-9129 HP SEAWATER FILTER
PH-ME-P-0259-005
0600-WS-84L97570-AT75-0
1:100 (DO NOT POCKET)

SEAWATER RETURNFROM LIVING QUARTERS/HV LER/LV LER/PFS
PH-ME-P-0325-001
1200-WS-84L97512-AT75-0

SEAWATER RETURN FROM LQ
PH-ME-P-0324-001
0600-WS-84L97492-AT75-4C
4C 40 N
(200x200)

(NOTE 4)
FO 93497
84

FROM 84-PX-9102A/B HP SEAWATER LIFT PUMPS
PH-ME-P-0259-004
1200-WS-84L97527-AT75-7C
(DO NOT POCKET)
7C 70 N

FROM POTABLE WATER LOADING STATION
PH-ME-P-0320-001
0600-WD-47L95102-AS20-0
1:100 (DO NOT POCKET)

FROM SW FILTER PSV'S
PH-ME-P-0259-005
0400-WS-84L97538-AT75-0
1:100 (DO NOT POCKET)

PH-S-1004
SP 207
(NOTE 2)
(NOTE 3)
0200-WS-84L97628-AT75-4C
4C 40 Y
0200 GLOBE 84-V-90854

1200-WS-84L97527-AT75-7C
0600-WS-84L97570-AT75-0
0800-WS-84L97464-AT75-0

FROM 45-HB-9101A/B COOLING MEDIUM SEAWATER COOLER
PH-ME-P-0264-001
1800-WS-84L97564-AT75-8C
8C 100 N

FROM 84-PX-9101A/B LP SEAWATER LIFT PUMPS
PH-ME-P-0258-001
1200-WS-84L97457-AT75-8C
8C 100 N

0800 (NOTE 5)

CELLAR DECK 8C 0

CELLAR DECK 7C 0

BACKWASH FROM 84-CA-9119 LP SEAWATER FILTER
PH-ME-P-0259-001
0600-WS-84L97477-AT75-0
1:100 (DO NOT POCKET)

84 FO 93496

T 406
T 407
T 405
T 409
T 408

EL.: -10m

LP SEAWATER DUMP CAISSON 4200 O.D.

HP SEAWATER DUMP CAISSON 2800 O.D.

Field for file specification:
Field for date and time :

NOTES:
1. DELETED.
2. VENT TO SAFE LOCATION.
3. AIR RELEASE/VAC BREAKER AT HIGH POINT.
4. LOCATE 84-FO-93497 AT MINIMUM ELEVATION.
5. CONNECTION FOR FUTURE OIL EXPORT COOLER (11-HA-9104) AT 6853 KW RATING.

REV	DATE	BY	DESCRIPTION	CHK	ENGR	APPR	CLIENT
5	13OCT09	JDK	RE-ISSUED FOR CONSTRUCTION	RAK	RK/JL/PS	GMK	
4	22MAY09	JS	RE-ISSUED FOR CONSTRUCTION	SRK	RK/JB/JL	GMK	
3	14NOV08	JDK	RE-ISSUED FOR CONSTRUCTION	SRK	RK/JL/PS	SVS	
2	28APR08	JDK	RE-ISSUED FOR CONSTRUCTION	SRK	JC/JL/PS	SVS	
1	15APR08	JDK	RE-ISSUED FOR CONSTRUCTION	SRK	JC/JL/JB	RB	
0	01OCT07	JDK	ISSUED FOR CONSTRUCTION	SRK	JC/ES/JB	SVS	

Wood Group Engineering (North Sea) Ltd.

MUSTANG INTERNATIONAL, LP
HOUSTON, TEXAS

PROJECT NO. 10910

bp

VALHALL
RE-DEVELOPMENT PROJECT
PIPING & INSTRUMENT DIAGRAM
OVERBOARD

REGISTRATION CODES			DRAWING NO.					SCALE
AREA	SYSTEM	TYPE	FACILITY CODE	ORIG.	DISP.	SEQ. No.	SHEET	NONE
T	84	XB	PH	ME	P	0259	003	REV. 5

A1

84-PX-9101A-M01
SEAWATER LIFT PUMP MOTOR

84-PX-9101A
SEAWATER LIFT PUMP

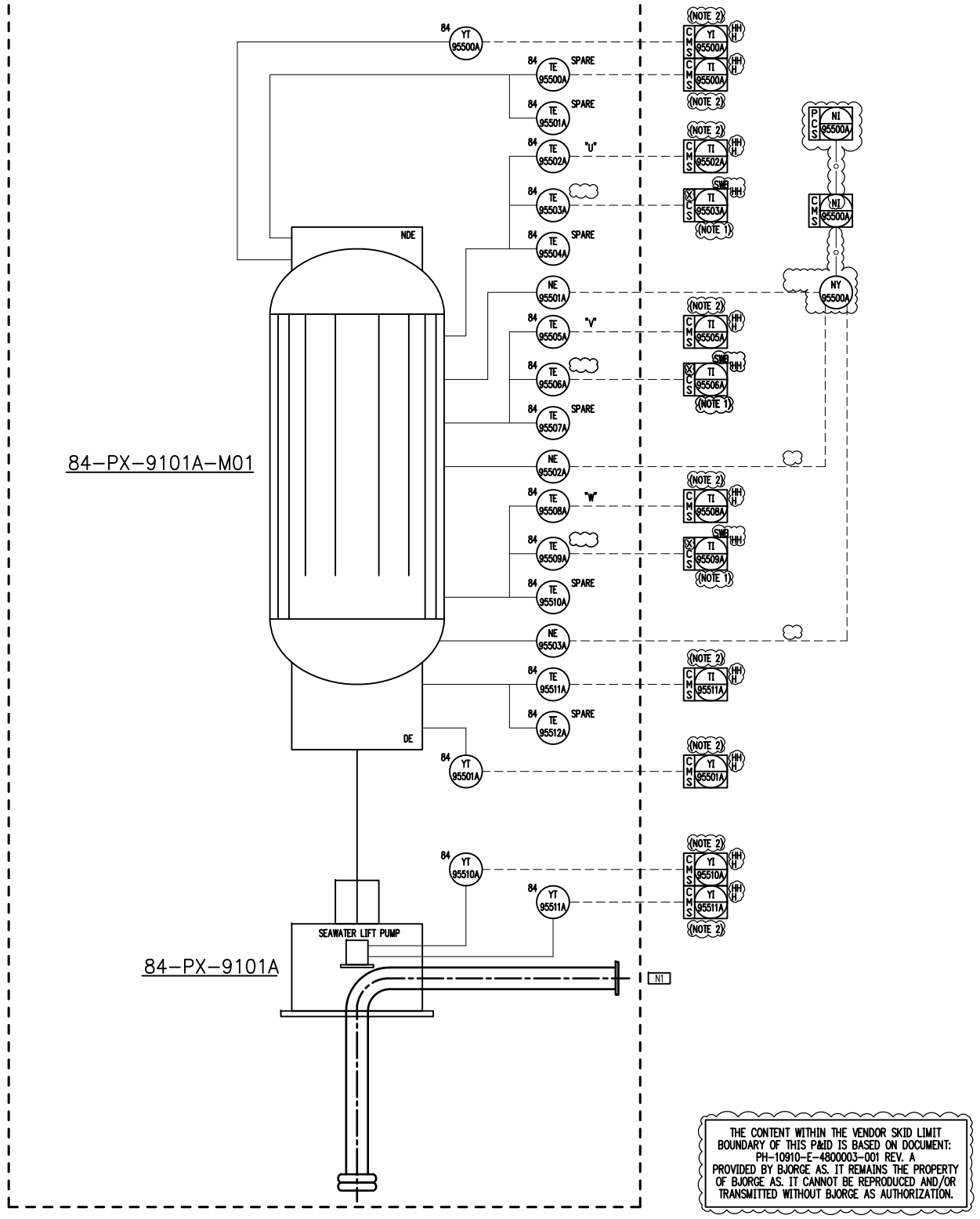

THE CONTENT WITHIN THE VENDOR SKID LIMIT BOUNDARY OF THIS P&ID IS BASED ON DOCUMENT: PH-10910-E-4800003-001 REV. A PROVIDED BY BJORGE AS. IT REMAINS THE PROPERTY OF BJORGE AS. IT CANNOT BE REPRODUCED AND/OR TRANSMITTED WITHOUT BJORGE AS AUTHORIZATION.

NOZZLE	DESCRIPTION	SIZE	STANDARD
N1	PUMP DISCHARGE	18"	ANSI B16.5/150# FF

NOTES:
1. TO BE CONNECTED TO SWITCHGEAR PROTECTIVE RELAY.
2. SUMMARIZED TRIP SIGNAL (84-NXO-95501A) TO SHUTDOWN PUMP UNIT IS SENT FROM CMS TO PSD.

REV	DATE	BY	DESCRIPTION	CHK	ENGR	APPR	CLIENT
1	22MAY09	JDK	RE-ISSUED FOR CONSTRUCTION	SRK	RK/AB/JL	GMK	
0	10OCT08	JDK	ISSUED FOR CONSTRUCTION	SRK	RK/JL/PS	SVS	

Field for file specification:
Field for date and time :

Wood Group Engineering (North Sea) Ltd.
MUSTANG INTERNATIONAL, LP
HOUSTON, TEXAS
PROJECT NO. 10910

bp

VALHALL
RE-DEVELOPMENT PROJECT
PIPING & INSTRUMENT DIAGRAM
LP SW LIFT PUMP A CONDITION MONITORING

REGISTRATION CODES			DRAWING NO.					SCALE
AREA	SYSTEM	TYPE	FACILITY CODE	ORIG.	DISP.	SEQ. No.	SHEET	NONE
U12-02	84	XB	PH	ME	P	0107	004	REV. 1

A1

84-PX-9101B-M01
SEAWATER LIFT PUMP MOTOR

84-PX-9101B
SEAWATER LIFT PUMP

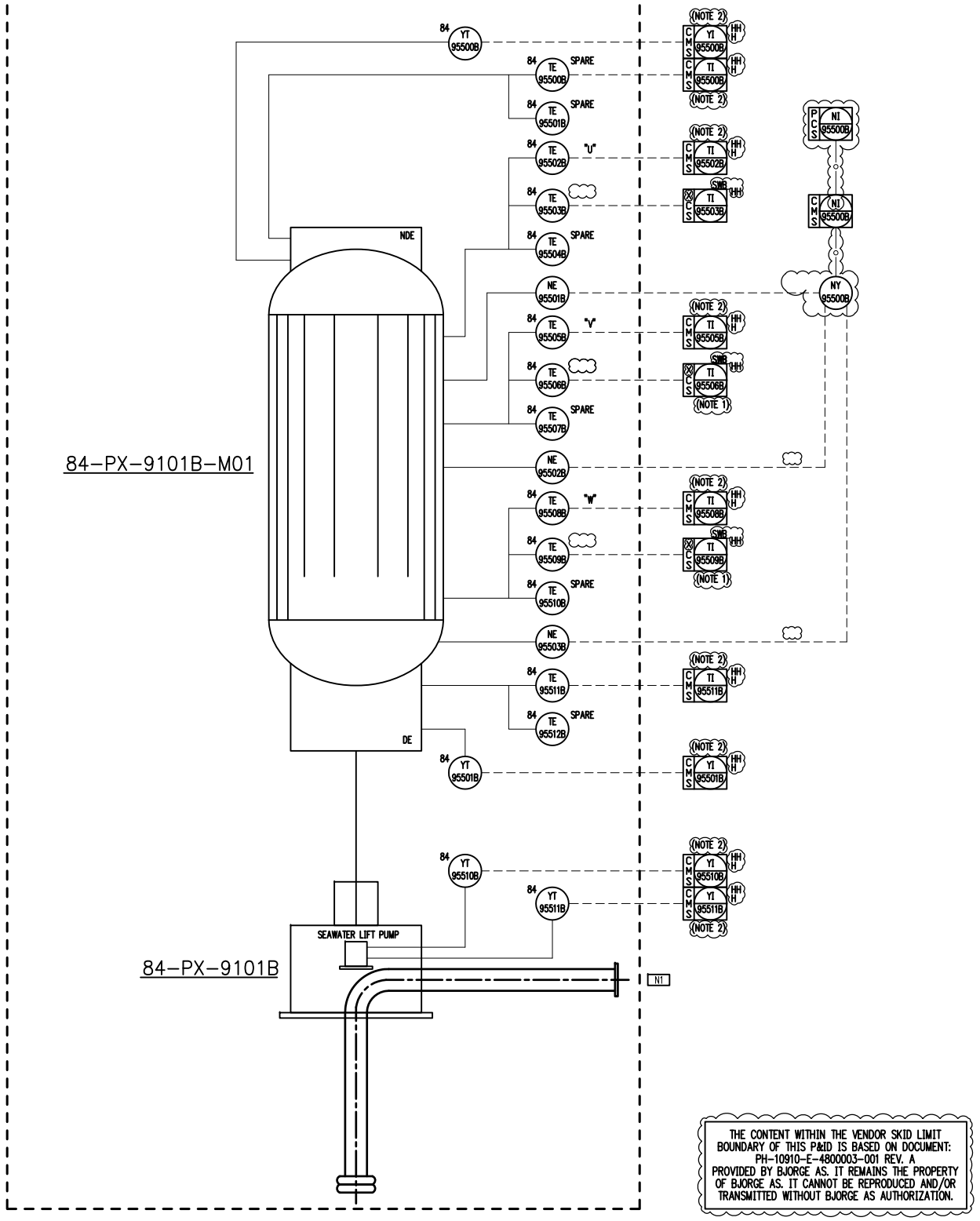

NOZZLE	DESCRIPTION	SIZE	STANDARD
N1	PUMP DISCHARGE	18"	ANSI B16.5/150# FF

THE CONTENT WITHIN THE VENDOR SKID LIMIT BOUNDARY OF THIS P&ID IS BASED ON DOCUMENT: PH-10910-E-4800003-001 REV. A PROVIDED BY BJORGE AS. IT REMAINS THE PROPERTY OF BJORGE AS. IT CANNOT BE REPRODUCED AND/OR TRANSMITTED WITHOUT BJORGE AS AUTHORIZATION.

NOTES:
1. TO BE CONNECTED TO SWITCHGEAR PROTECTIVE RELAY.
2. SUMMARIZED TRIP SIGNAL (84-NXO-95501B) TO SHUTDOWN PUMP UNIT IS SENT FROM CMS TO PSD.

REV	DATE	BY	DESCRIPTION	CHK	ENGR	APPR	CLIENT
1	22MAY09	JDK	RE-ISSUED FOR CONSTRUCTION	SRK	RK/AB/JL	GMK	
0	10OCT08	CDB	ISSUED FOR CONSTRUCTION	SRK	RK/JL/PS	SVS	

Wood Group Engineering (North Sea) Ltd.
MUSTANG INTERNATIONAL, LP
HOUSTON, TEXAS
PROJECT NO. 10910

bp

VALHALL
RE-DEVELOPMENT PROJECT
PIPING & INSTRUMENT DIAGRAM
LP SW LIFT PUMP B CONDITION MONITORING

REGISTRATION CODES			DRAWING NO.					SCALE
AREA	SYSTEM	TYPE	FACILITY CODE	ORIG.	DISP.	SEQ. No.	SHEET	NONE
U12-02	84	XB	PH	ME	P	0107	005	REV. 1

Field for file specification:
Field for date and time :

A1

84-PX-9102A/B

HP SEAWATER LIFT PUMPS

CAPACITY: 900m ^{3}/h AT 9.5 BARG DISCHARGE AT CELLAR DECK (EACH)
DRIVER: 500 KW AT 1800 RPM
(2 X 100%)

FROM 84-XX-9112 ELECTROCHLORINATION GENERATOR
PH-ME-P-0260-001
0200-CS-84L97520-AT75-4C
4C 40 Y
0200-CS-84L97521-AT75-4C
1400-WS-84L97525-AT75-0
TO 84-CA-9129 HP SEAWATER FILTER
1400-WS-84L97525-AT75-0
PH-ME-P-0259-005

84-PX-9102A

XV 93482A (NOTE 3,4,15) — XV100 1400 BUAT20R — 84-V-99716 — 0100 GTATOOR 84-V-99707 — 1400 CHA150R 84-V-90838 (NOTE 6) — FO 93482A
(NOTE 9) — 4C 40 Y — FO 93478A (V) — (NOTE 2) — SP 208 AIR RELEASE (V) TRAP PH-S-1002
0200-WS-84L97528-AT75-4C (NOTE 10) 4C 40 Y
0200 GTATOOR 84-V-90887 — 0075 GTATOOR 84-V-99708
FI 93471A (NOTE 8) — FT 93471A (NOTE 15) — 0100 0200x0100 GBATOOR 84-V-99709
XV 93472A (NOTE 3,4,15) — XV106 0200 GTATOOR
0800-WS-84L97526-AT75-4C 4C 40 N
PI 93477A — PT 93477A — 0150 CBATIOW 84-V-90837
1400-WS-84L97525-AT75-0
TI 93477A — TT 93477A — 0150
0100 GTATOOR 84-V-99705 — (NOTE 11) FT 93477A — FIC 93471A — FV 93477A — 0800x0600 0600 4C 7C
FIELD INSTALL T957B — T957A — FCL 93471A (NOTE 7)
0075 LOW POINT GTATOOR 84-V-99706
PUMP A COOLING OIL SUPPLY PH-ME-P-0104-006 0150-OL-84L97600-BD20-0
PUMP A COOLING OIL RETURN PH-ME-P-0104-006 0150-OL-84L97601-BD20-0
T954A — T954B — 0200x0100 — 0150x0050 0050 GTBDOOR 84-V-92988 LOW POINT — T956B — T956A — FIELD INSTALL
0150x0050 0050 GTBDOOR 84-V-90954 LOW POINT — T955A — T955B — FIELD INSTALL
TITANIUM — CARBON STEEL — 1000 BUAT20R 84-V-99699 — TITANIUM — SP 326 FLANGE ISOLATION KIT PH-S-2402
1000-WS-84L97536-AT75-7C
PX 9102A-M01 — P — M M01
EL. -50M (NOTES 1,12,14)
7C 7D N

84-PX-9102B

XV 93482B (NOTE 3,4,15) — XV100 1400 BUAT20R — 84-V-99715 — 0100 GTATOOR 84-V-99714 — 1400 CHA150R 84-V-90842 (NOTE 6) — FO 93482B
(NOTE 9) — 4C 40 Y — FO 93478B (V) — (NOTE 2) — SP 208 AIR RELEASE (V) TRAP PH-S-1003
0200-WS-84L97532-AT75-4C (NOTE 10) 4C 40 Y
0200 GTATOOR 84-V-90888 — 0075 GTATOOR 84-V-99710
FI 93471B (NOTE 8) — FT 93471B (NOTE 15) — 0100 0200x0100 GBATOOR 84-V-99711
XV 93472B (NOTE 3,4,15) — XV106 0200 GTATOOR
0800-WS-84L97531-AT75-4C 4C 40 N
PI 93477B — PT 93477B — 0150 CBATIOW 84-V-90841
1400-WS-84L97530-AT75-0
TI 93477B — TT 93477B — 0150
0100 GTATOOR 84-V-99712 — (NOTE 11) FT 93477B — FIC 93477B — FV 93477B — 0800x0600 0600 4C 7C
FIELD INSTALL T961B — T961A — FCL 93477B (NOTE 7)
0075 LOW POINT GTATOOR 84-V-99713
PUMP B COOLING OIL SUPPLY PH-ME-P-0104-006 0150-OL-84L97602-BD20-0
PUMP B COOLING OIL RETURN PH-ME-P-0104-006 0150-OL-84L97603-BD20-0
T958A — T958B — 0200x0100 — 0150x0050 0050 GTBDOOR 84-V-92992 LOW POINT — T960B — T960A — FIELD INSTALL
0150x0050 0050 GTBDOOR 84-V-90955 LOW POINT — T959A — T959B — FIELD INSTALL
TITANIUM — CARBON STEEL — 1000 BUAT20R 84-V-99840 — TITANIUM — SP 326 FLANGE ISOLATION KIT PH-S-2403
1000-WS-84L97537-AT75-7C
PX 9102B-M01 — P — M M01
EL. -50M (NOTES 1,12,14)
7C 7D N
1200x1000
1200-WS-84L97527-AT75-7C OVERBOARD STREAM 1 TO HP SEAWATER DUMP CAISSON
(NOTE 13) 7C 7D N PH-ME-P-0259-003

Field for file specification:
Field for date and time :

NOTES:
1. SEAWATER LIFT PUMPS CAISSON TERMINATING AT 50M BELOW L.A.T.
2. AIR RELEASE VALVE / VACUUM BREAKER 2" VENDOR SUPPLY, TO BE MOUNTED VERTICALLY.
3. VALVE TO CLOSE IF CORRESPONDING SEAWATER LIFT PUMPS STOPS.
4. VALVE TO OPEN AUTOMATICALLY AFTER START-UP OF CORRESPONDING SEAWATER LIFT PUMP.
5. DELETED.
6. NON / SLAM CHECK VALVES.
7. INDIVIDUAL TRIP ON CORRESP. PUMP IF FLOW LESS THAN FCL. ATER PUMP STARTUP SEQUENCE.
8. FLOW DIRECTION TO BE VERTICAL UP. PROVIDE 10D UPSTREAM AND 5D DOWNSTREAM.
9. ROUTE TO SAFE LOCATION.
10. AIR RELEASE VALVE/VACUUM BREAKER SHALL BE LOCATED AT THE HIGHEST POSSIBLE LOCATION AND AS CLOSE TO THE DISCHARGE BLOCK VALVE AS POSSIBLE.
11. MAGMETER. PROVIDE 5D UPSTREAM AND 2D DOWNSTREAM.
12. SLOTTED AREA FOR WATER INLET ELEVATION FOR PUMPS A AND B TO BE -50M.
13. PIPEWORK TO RISE TO HIGH POINT MINIMUM 10M ABOVE FV-93477A/B.
14. FOR COOLING OIL PUMP SYSTEM INFORMATION SEE DWG. PH-ME-P-0104-006.
15. REFER TO DOCUMENT VRD-ME-P-0042 FOR OPERATING DETAILS.

REV	DATE	BY	DESCRIPTION	CHK	ENGR	APPR	CLIENT
5	06OCT09	JDK	RE-ISSUED FOR CONSTRUCTION	RAK	RK/JL/PS	GMK	
4	22MAY09	JDK	RE-ISSUED FOR CONSTRUCTION	SRK	RK/JB/JL	GMK	
3	14NOV08	JDK	RE-ISSUED FOR CONSTRUCTION	SRK	RK/JL/PS	SVS	
2	28APR08	JDK	RE-ISSUED FOR CONSTRUCTION	SRK	JC/JL/PS	SVS	
1	15APR08	JDK	RE-ISSUED FOR CONSTRUCTION	SRK	JC/JL/JB	RB	
0	01OCT07	JDK	ISSUED FOR CONSTRUCTION	SRK	JC/ES/JB	SVS	

Wood Group Engineering (North Sea) Ltd.
MUSTANG INTERNATIONAL, LP
HOUSTON, TEXAS
PROJECT NO. JH

bp

VALHALL
RE-DEVELOPMENT PROJECT
PIPING & INSTRUMENT DIAGRAM
HP SEAWATER LIFT PUMPS

REGISTRATION CODES			DRAWING NO.					SCALE
AREA	SYSTEM	TYPE	FACILITY CODE	ORIG.	DISP.	SEQ. No.	SHEET	NONE
U12-02	84	XB	PH	ME	P	0259	004	REV. 5

A1

84-XX-9132
SEAWATER FILTER SKID

84-CA-9129
HP SEAWATER FILTER

SIZE: 1.2m O.D. x 3.89m OAL
OPER.: 9.5 BARG AT 13.5°C
DESIGN: 14 BARG AT 50°C
CAPACITY: 1800 M3/H
MOTOR: 55 KW AT 1700 RPM
(1 x 100%)

1.5G3 FIRE SET @ 14 BARG
84 PSV 93494A
0300 BLA10R
0300-WS-84L97543-AT75-0
0400x0300
1x100 (DO NOT POCKET)
0400-WS-84L97560-AT75-0
OVERBOARD STREAM 1 TO HP SEAWATER DUMP CAISSON
0400-WS-84L97538-AT75-0
PH-ME-P-0259-003
84 HV 93494A-03 (NOTE 3,6)
0075 GTA10DR 84-V-90878
0075 GTA10DR 84-V-90877
0150 GTA10DR
84 HV 93494A-01 (NOTE 3,6)
0200x0150
(DO NOT POCKET)
4C 40 Y
0200-WS-84L97542-AT75-4C
0300x0200
84 PDT 93491
PDC 93491 BACKWASH AT 0.5 BARG
(NOTE 2)
HS 93491
XC 93491
(NOTE 1)
CA 9129-M01
84-CA-9129
TRIM: 0200-WS-84L97584-AT75-4C (NOTE 6)
M01
0075 GTA10DR 84-V-90879 (NOTE 7)
0200
84 AE 93493
BLEED RING PH-S-0072
SP 12
0075 GTA10DR 84-V-90883
0200 GTA10DR 84-V-90849
0150
TO HP SEAWATER DISTRIBUTION
1400-WS-84L97480-AT75-0
PH-ME-P-0259-002
2400x1400
1400 BUAT20R 84-V-90846
1400-WS-84L97541-AT75-0
1400 BUAT20R 84-V-90848
0150 GBA10W 84-V-90850
0150 GBA10W 84-V-90851
84 TT 93495
84 PT 93493
84 PT 93494
PCS TI 93495
PCS PI 93493 L
PSD PI 93494 LL
P (NOTE 4)
PH-S-0071
SP 12 BLEED RING
0075 GTA10DR 84-V-90884
0200 GBA10R 84-V-90843
FROM 84-PX-9102A/B HP SEAWATER LIFT PUMPS
PH-ME-P-0259-004
1400-WS-84L97525-AT75-0
1400-WS-84L97539-AT75-0
1400 BUAT20R 2400x1400 84-V-90845
1400 BUAT20R 84-V-90844
0075 GTA10DR 84-V-90876
0075 GTA10DR 84-V-90875
SAMPLING POINT
INSP. PORT 0800
4C 30 N
XV 93499A
XV106 0300 BLA10R
0300-WS-84L97547-AT75-4C
0200 (0200x0075)
0075 GTA10DR 84-V-90880 (NOTE 6)
84 FO 93494
TITANIUM | CARBON STEEL | TITANIUM
0600 BUAC05R 84-V-90847
CLEAN OUT CONNECTION
0600-WS-84L97544-AT75-0
1x100 (DO NOT POCKET)
0600-WS-84L97570-AT75-0
OVERBOARD STREAM 2 TO HP SEAWATER DUMP CAISSON
PH-ME-P-0259-003
0075 GTA10DR 84-V-90881
SP 325 PH-S-2401 FLANGE ISOLATION KIT
1400-WS-84L97540-AT75-0
0075 GTA10DR 84-V-90882
SP 192 PH-S-1912
(NOTE 5)
84-XX-9132 SKID LIMITS
CONT. ON DWG. PH-ME-P-0259-001
FROM PSV-93224A PH-ME-P-0259-001
0300-WS-84L97473-AT75-0
TO 84-AT-93493 PH-ME-P-0259-001
1/4" O.D. TUBING

Field for file specification:
Field for date and time :

NOTES:
1. AUTOMATIC BACKFLUSHING TO BE INITIATED AT HIGH DIFFERENTIAL PRESSURE OR TRIGGERED BY A TIMER.
2. MANUAL INITIATION OF BACKFLUSH.
3. KEY INTERLOCKED VALVE.
4. ADJUSTABLE TIME DELAY T1 TO ALLOW STANDBY PUMP TO START AND ATTEMPT PRESSURE RECOVERY. PSLL-93494 TO ACTIVATE PSDO, VALHALL FIELD COMPLETE SHUTDOWN. REFER TO DOCUMENT VRD-ME-P-0042 FOR OPERATION DETAILS.
5. TUBING PURCHASED WITH PRE-FITTED INSULATION AND HEAT TREATING.
6. FILTER 84-CA-9129 TO BE DRAINED OF WATER BEFORE ISOLATION OF 84-PSV-93494A.
7. VENT VALVE TO BE INSULATED BUT NOT ELECTRIC TRACED.

REV	DATE	BY	DESCRIPTION	CHK	ENGR	APPR	CLIENT
5	06OCT09	JDK	RE-ISSUED FOR CONSTRUCTION	RAK	RK/JL/PS	GMK	
4	22MAY09	JDK	RE-ISSUED FOR CONSTRUCTION	SRK	RK/AB/JL	GMK	
3	01OCT08	JDK	RE-ISSUED FOR CONSTRUCTION	SRK	RK/PS/JL	SVS	
2	28APR08	JDK	RE-ISSUED FOR CONSTRUCTION	SRK	JC/JL/PS	SVS	
1	15APR08	JDK	RE-ISSUED FOR CONSTRUCTION	SRK	JC/JL/AB	RB	
0	01OCT07	JDK	ISSUED FOR CONSTRUCTION	SRK	JC/ES/AB	SVS	

Wood Group Engineering (North Sea) Ltd.
MUSTANG INTERNATIONAL, LP
HOUSTON, TEXAS
PROJECT NO. 10910

bp

VALHALL
RE-DEVELOPMENT PROJECT
PIPING & INSTRUMENT DIAGRAM
HP SEAWATER FILTER

REGISTRATION CODES			DRAWING NO.					SCALE
AREA	SYSTEM	TYPE	FACILITY CODE	ORIG.	DISP.	SEQ. No.	SHEET	NONE
U12-02	84	XB	PH	ME	P	0259	005	REV. 5

A1

60-HB-9126
VSD COOLER
(PROVIDED BY ABB)

TO POTABLE WATER MAKERS PH-ME-P-0324-001
HP SEAWATER SUPPLY TO PFS PH-ME-P-0325-001
HP SEAWATER SUPPLY TO LQ PH-ME-P-0324-001
OVERBOARD STREAM 2 TO HP TO HP SEAWATER DUMP CAISSON PH-ME-P-0259-003
ESSENTIAL HP SEAWATER SUPPLY TO LQ PH-ME-P-0324-001
COOLING MEDIUM SUPPLY TO VSD COOLER PH-ME-P-0326-001
FROM ABB CONTROLLER IN 60-EN-9009 PH-ME-P-0326-001
OVERBOARD STREAM 1 TO HP TO HP SEAWATER DUMP CAISSON PH-ME-P-0325-001
FROM FIREWATER RINGMAIN PH-ME-P-0292-001
TO FIREWATER RINGMAIN PH-ME-P-0292-001
OVERBOARD STREAM 2 TO HP SEAWATER DUMP CAISSON PH-ME-P-0259-003
OVERBOARD STREAM 2 TO HP SEAWATER DUMP CAISSON PH-ME-P-0259-003
TO EMERGENCY/ESSENTIAL GENERATOR A PH-ME-P-0318-002
TO EMERGENCY/ESSENTIAL GENERATOR B PH-ME-P-0319-002
TO UTILITY STATIONS PH-ME-P-0310-004

FROM 84-CA-9129 HP SEAWATER FILTER PH-ME-P-0259-005
COOLING MEDIUM RETURN FROM VSD COOLER PH-ME-P-0326-001
60-HB-9126

ABOVE CELLAR DECK
CELLAR DECK

NON-ESSENTIAL CONSUMERS
ESSENTIAL CONSUMERS

NOTES:
1. KEY INTERLOCKED VALVES.
2. COMMISSIONING TIE-IN CONNECTIONS.
3. 84-PSV-93487/93488 AND 84-PT-93234 TO BE LOCATED AT SAME ELEVATION AS VSDCOOLER (EL. 49500mm).
4. GLOBE VALVE TO BE SET ON COMMISSIONING AND TO REMAIN IN POSITION WITH HANDWHEEL REMOVED.
5. DELETED.
6. DELETED.
7. DELETED.
8. DELETED.
9. DELETED.
10. MINIMIZE LENGTH.
11. VERTICAL RISE TO HIGH POINT. DO NOT POCKET.
12. MAGMETER. PROVIDE 5D UPSTREAM AND 2D DOWNSTREAM.
13. DELETED.
14. 84-FO-93232 IS A SAFETY REGISTER DEVICE.
15. FOR CHECK VALVE INTEGRITY TESTING.
16. LINE TO RISE MIN. 5M ABOVE 60-HB-9126 BEFORE TIE-IN.
17. 2507 SUPER DUPLEX VALVE.

REV	DATE	BY	DESCRIPTION	CHK	ENGR	APPR	CLIENT
5	08SEP09	JDK	RE-ISSUED FOR CONSTRUCTION	RAK	RK/JL/PS	GMK	
4	22MAY09	JS	RE-ISSUED FOR CONSTRUCTION	SRK	RK/JB/JL	GMK	
3	14NOV08	JDK	RE-ISSUED FOR CONSTRUCTION	SRK	RK/JL/PS	SVS	
2	28APR08	JDK	RE-ISSUED FOR CONSTRUCTION	SRK	JC/JL/PS	SVS	
1	15APR08	JDK	RE-ISSUED FOR CONSTRUCTION	SRK	JC/JL/JB	RB	
0	010CT07	JDK	ISSUED FOR CONSTRUCTION	SRK	JC/ES/JB	SVS	

Wood Group Engineering (North Sea) Ltd.
MUSTANG INTERNATIONAL, LP
HOUSTON, TEXAS
PROJECT NO. 10910

bp

VALHALL
RE-DEVELOPMENT PROJECT
PIPING & INSTRUMENT DIAGRAM
SEAWATER DISTRIBUTION

REGISTRATION CODES			DRAWING NO.					SCALE
AREA	SYSTEM	TYPE	FACILITY CODE	ORIG.	DISP.	SEQ. No.	SHEET	NONE
T	84	XB	PH	ME	P	0259	002	REV. 5

Field for file specification:
Field for date and time :

A1

62-HB-9501/9502

TRANSFORMER HEAT EXCHANGERS

DUTY: 275.5 kW EACH (2 x 100% UNITS)
DESIGN: COOLING MEDIUM: 10barg @ 80°C.
OPERATING: COOLING MEDIUM: 6.0barg @ 66°C/54.4°C IN/OUT.
DESIGN: SEAWATER: 10barg @ 80°C.
OPERATING: SEAWATER: 5.5barg @ 11°C/20.8°C IN/OUT.
MATERIAL: TITANIUM.

65-GJ-9566A/B

AHU COOLING COIL
AC/DC AREAS

CAPACITY: 266kW (2 x 100% UNITS)
SEAWATER: 11.41 l/s @ 10barg.
SEAWATER: SUPPLY/RETURN 13.5°C/19.5°C.

45-HB-9651/9652/9653

IGBT HEAT EXCHANGERS

DUTY: 1321 kW EACH (3 x 50% UNITS)
DESIGN: COOLING MEDIUM: 10barg @ 60°C.
OPERATING: COOLING MEDIUM: 6.0barg @ 37.2°C/21°C IN/OUT.
DESIGN: SEAWATER: 10barg @ 60°C.
OPERATING: SEAWATER: 5.5barg @ 13.5°C/20.5°C IN/OUT.
MATERIAL: TITANIUM.

NOTES
1. DELETED.
2. PIPEWORK TO BE ROUTED SYMMETRICAL FOR INLETS AND OUTLETS ON IGBT HEAT EXCHANGERS AND TRANSFORMER HEAT EXCHANGERS.
3. BREAK FLANGES TO FACILITATE REMOVAL OF AHU COOLING COILS AND HEATER PLATES.
4. ABB CONTROLS FOR COOLING WATER TEMPERATURE REGULATION.
   VCCP: VALVE COOLING CONTROL AND PROTECTION SOFTWARE.
   VCI: ABB SOFTWARE ROUTING CODE.
5. DELETED.
6. DELETED.
7. TV VALVES SUPPLIED BY WOZAIR (AHU VENDOR). REV
8. VENT VACUUM BREAKERS AT HIGH POINTS.
9. GLOBE VALVE POSITION SET DURING COMMISSIONING AND HANDWHEEL REMOVED.
10. LOCK OPEN HPSW VALVES DOWNSTREAM OF ABB EXCHANGERS TO PREVENT OVERPRESSURE DUE TO THERMAL EXPANSION.

NOTES CONT.
11. LOCK OPEN HPSW VALVES UPSTREAM OF AHU COOLING COIL TO PREVENT OVERPRESSURE DUE TO THERMAL EXPANSION.
12. DRAINAGE OF AHU COOLING COIL IS REPRESENTED ON P&ID PH-LP-P-4351-001.
13. VALVE AND REACTOR COOLING MAIN CIRCUIT DRAWINGS PER ABB SWEDEWATER PH-AS-E-0075-001/2/3.
14. T-PIECE SPOOL TO FACILITATE POSSIBLE INSTALLATION OF BACK PRESSURE REGULATOR AT FUTURE DATE.
15. INSULATE/HEAT TRACE TO OUTLET FLANGE OF VENT/VAC. BREAKER.
16. INSTALL VENT/VAC. BREAKER AFTER PRESSURE TEST. INSTALL DISCHARGE PIPE AFTER FLOODING OF HPSW SYSTEM DURING COMMISSIONING.

HOLDS
1.-5. CLEARED.

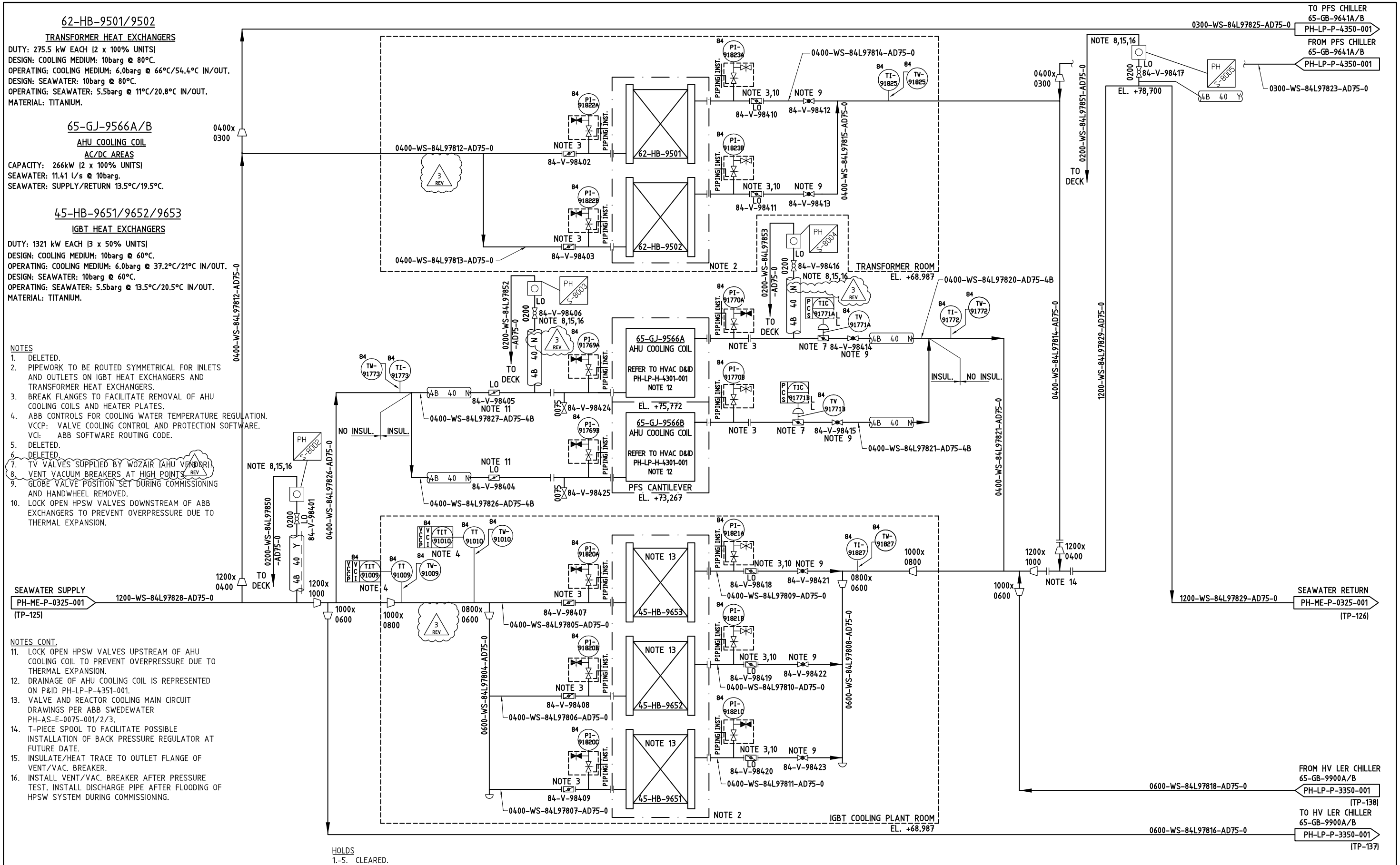

REV. No.	DESCRIPTION OF REVISION	ISSUE DATE	MADE BY	CHK'D BY	DISC. APPR.	PROJ APPR.	CLIENT APPR.
1	REISSUED FOR CONSTRUCTION	27.07.09	SW	JR	RJ	DED	
0	ISSUED FOR CONSTRUCTION	30.04.09	SW	JR	DED	AM	
D	REISSUED FOR AFD/CLIENT REVIEW (DCP-0720-P-760)	24.03.09	SW	JR	TOD	RW	
C	REISSUED FOR AFD/CLIENT REVIEW	19/01/09	SW	JR	TOD	RW	
B	ISSUED FOR AFD/CLIENT REVIEW (FOR HAZOP)	23/09/08	SW	RC	TOD	RD	
A	ISSUED FOR IDC	02/07/08	LM	JM			

REV. No.	DESCRIPTION OF REVISION	ISSUE DATE	MADE BY	CHK'D BY	DISC. APPR.	PROJ APPR.	CLIENT APPR.
3	REISSUED FOR CONSTRUCTION (DCP-0720-L-1871)	03/02/10	GO	RC	DED	AD	
2	REISSUED FOR CONSTRUCTION (DCP-0720-P-1362)	12.08.09	SW	RWJ	DED	DED	

VALHALL RE-DEVELOPMENT
PROJECT No. C06106

SLP ENGINEERING LTD
HAMILTON ROAD
LOWESTOFT
SUFFOLK, NR32 1XF

REFERENCE DRAWINGS:	DRAWING TITLE:
PH-ME-P-0101-001/2/3	PH LEGEND AND GENERAL SYMBOLS
PH-ME-P-0259-002	P & ID SEAWATER DISTRIBUTION
PH-LP-P-4350-001	P & ID PFS CHILLER PLANT
PH-LP-P-3350-001	P & ID HV LER CHILLER PLANT

bp

P & ID
PFS SEA WATER COOLING

REGISTRATION CODES		
AREA	SYSTEM	TYPE
M	84	XB

DRAWING NO.					
FACILITY CODE	ORIG.	DISP.	SEQ. No.	SHEET	
PH	LP	P	4353	001	

SCALE

REV. 3

A1

84-XX-9112
ELECTROCHLORINATION GENERATOR
CAPACITY: 27 Kg/hr EQUIVALENT CHLORINE
SEAWATER TREATING CAPACITY: 4200 M^3/HR
ELECTRIC POWER: 2.6 kW
INLET SEAWATER RATE: 25.0 M^3/HR
VENDOR SKID: CAMERON

84-EC-9034
ELECTROCHLORINATION PANEL

84-CX-9107
ELECTROCHLORINATION CELL
CAPACITY: 0.60 m3/h
OPERATING: 7.5 BARG AT 4/14.5°C
DESIGN: 10 BARG AT −5/40°C
(NOTE 4)

84-VX-9108
ELECTROCHLORINATION COPPER ADDING VESSEL
CAPACITY: 25 m3/h
OPERATING: 7.5 BARG AT 4/14.5°C
DESIGN: 14 BARG AT −8.2/50°C

84-XX-9112 SKID LIMIT

PACKAGE START/STOP
PACKAGE STOP
690V 3PH 60HZ
CURRENT SET POINT
CURRENT
VOLTAGE
COMMON ALARM
(NOTE 1)
(NOTE 3)
(NOTE 4)
(NOTE 2)
(NOTE 6)
SP=7.5 BARG
SP=10.0 BARG
BLOCKED DISCHARGE
0100-CS-84L97615-PVDF-4C
PVDF
AT75
GUARD RING
0200-CS-84L97613-AT75-4C
0075-CS-84L97614-AT75-0
SAMPLE POINT
0200-CS-84L97550-AT75-4C
0200-CS-84L97519-AT75-4C
0200-CS-84L97452-AT75-4C
0200-CS-84L97520-AT75-4C
0200-CS-84L97549-AT75-4C
TO 48-PH-9103A FIREWATER LIFT PUMP
PH-ME-P-0290-001
TO 84-PX-9103B LP SEAWATER LIFT PUMP
PH-ME-P-0258-001
TO 84-PX-9101A LP SEAWATER LIFT PUMP
PH-ME-P-0258-001
TO 84-PX-9102A/B HP SEAWATER LIFT PUMPS
PH-ME-P-0259-004
TO 48-PH-9103B FIREWATER LIFT PUMP
PH-ME-P-0291-001
FLANGE ISOLATION KIT
CARBON STEEL
AT75
0200-WS-84L97611-AT75-4C
0200-WS-84L97610-AT75-4C
0300-WS-84L97481-AT75-4C
FROM HP SEAWATER DISTRIBUTION
PH-ME-P-0310-004
0100-DO-84L97617-AT75-0
0200-DO-84L97618-AT75-0
0300-DO-84L97616-AT75-0
0300-DO-84L97555-AT75-0
1:100
OVERBOARD LINE
EL. SAFE LOCATION BELOW CELLAR DECK

THIS P&ID IS BASED ON DOCUMENT PH-21426-P-4140017-001 REV. Z PROVIDED BY CAMERON. IT REMAINS THE PROPERTY OF CAMERON. IT CANNOT BE REPRODUCED AND/OR TRANSMITTED WITHOUT CAMERON'S AUTHORIZATION.

NOTES:
1. COMMON ALARM FROM UNIT CONTROL PANEL.
2. HASTELLOY.
3. UNIT CONTROL PANEL LOCATED IN ELECTRICAL EQUIPMENT ROOM.
4. SUITABLE FOR OPERATION AT −8.2 CELSIUS WITH INSULATION JACKET.
5. ALL ITEMS IN SKID BOUNDARY SUPPLIED BY VENDOR.
6. LOW PRESSURE ALARM 84-PAL-96071 WILL ALSO CLOSE POSING VALVES 84-XV-93202A/B, 84-XV-93472A/B & 48-XV-93541A/B. AUTO RESET OF POSING VALVES TO NORMAL CONTROL FUNCTION ON RE-ESTABLISHMENT OF NORMAL PRESSURE.

REV	DATE	BY	DESCRIPTION	CHK	ENGR	APPR	CLIENT
5	08SEP09	JDK	RE-ISSUED FOR CONSTRUCTION	RAK	RK/JL/PS	GMK	
4	22MAY09	JDK	RE-ISSUED FOR CONSTRUCTION	SRK	RK/JB/JL	GMK	
3	15OCT08	CDB	RE-ISSUED FOR CONSTRUCTION	SRK	RK/PS/JL	RAB	
2	28APR08	JDK	RE-ISSUED FOR CONSTRUCTION	SRK	JC/JL/PS	SVS	
1	15APR08	JDK	RE-ISSUED FOR CONSTRUCTION	SRK	JC/JL/JB	RB	
0	010CT07	JDK	ISSUED FOR CONSTRUCTION	SRK	JC/ES/JB	SVS	

Wood Group Engineering (North Sea) Ltd.
MUSTANG INTERNATIONAL, LP
HOUSTON, TEXAS
PROJECT NO. 10910

bp

VALHALL
RE-DEVELOPMENT PROJECT
PIPING & INSTRUMENT DIAGRAM
ELECTROCHLORINATION GENERATOR

REGISTRATION CODES			DRAWING NO.					SCALE
AREA	SYSTEM	TYPE	FACILITY CODE	ORIG.	DISP.	SEQ. No.	SHEET	NONE
T	84	XB	PH	ME	P	0260	001	REV. 5

Field for file specification:
Field for date and time :

A1

84-CS-9102A/B	84-CB-9126A/B	84-CB-9127A/B	84-VX-9109A/B	84-PS-9101A/B	84-PS-9101A/B-M01	84-PG-9102A/B	84-PG-9102A/B-M01	84-TB-9147A/B
HP SEAWATER LIFT PUMP LUBE OIL COOLING UNITS	FILLING FILTERS (S) GRADE: 7ø≥1000µm REF. ISO16889	DUPLEX FILTERS (S) GRADE: 12ø≥1000µm REF. ISO16889	ACCUMULATORS (S) VOLUME: 12 L PRECHARGE PRESS.: 11 bar DESIGN PRESSURE: 50 bar	OIL CIRC. PUMPS (S) DIFF. PRESS.: 5 BAR FLOW: 128 L/MIN.	OIL CIRC. PUMP MOTORS (S) VOLTAGE: 3 X 690 V / 60 Hz RATING: 11 kW	OIL PRESSURE PUMPS (S) FLOW RATE: 3.5 l/min. PRESSURE: 15 barg	OIL PRESSURE PUMP MOTORS (S) VOLTAGE: 3 X 690 V / 60 Hz RATING: 0.9 kW	COOLING OIL TANKS (S) TOTAL VOLUME: 165 L OPER. VOLUME: 100 L PRESSURE: ATM

(NOTE 6)

TAG NO. FOR ALL OIL CIRCULATION UNITS LISTED BELOW	TAG NUMBERS	TAG NUMBERS
OIL CIRCULATION UNIT	TAG NO. CS9102A	TAG NO. CS9102B
COOLING OIL TANK	TB-9147A	TB-9147B
LEVEL GAUGE	LG-95550A	LG-95550B
LEVEL TRANSMITTER / INDICATOR	LT-95551A	LT-95551B
FLOW ORIFICE (MEASURING DEVICE)	FE-95554A	FE-95554B
TEMPERATURE ELEMENT / INDICATOR	TE-95553A	TE-95553B
TEMPERATURE TRANSMITTER / INDICATOR	TT-95553A	TT-95553B
FLOW TRANSMITTER / INDICATOR	FT-95554A	FT-95554B
PRESSURE TRANSMITTER / INDICATOR	PT-95555A	PT-95555B
PRESSURE TRANSMITTER / INDICATOR	PT-95556A	PT-95556B
PARTICLE INDICATOR	XI-95557A	XI-95557B
PCV-PUMP/MOTOR UNIT	PCV-95558A	PCV-95558B
VIBRATION PROBE OIL PRESSURE PUMP	YE-95560A	YE-95560B
VIBRATION TRANSMITTER OIL PRESSURE PUMP	YT-95560A	YT-95560B
DIFF. PRESSURE TRANSMITTER	PDIT-95556A	PDIT-95556B
PRESSURE CONTR. VALVE SUPPLY OIL	PCV-95559A	PCV-95559B
PRESSURE CONTR. VALVE RETURN OIL	PCV-95560A	PCV-95560B
OIL CIRCULATION PUMP	PS-9101A	PS-9101B
OIL CIRCULATION PUMP MOTOR	PS-9101A-M01	PS-9101B-M01
OIL PRESSURE PUMP	PG-9102A	PG-9102B
OIL PRESSURE PUMP MOTOR	PG-9102A-M01	PG-9102B-M01
ACCUMULATOR	VX-9109A	VX-9109B
DUPLEX FILTER	CB-9127A	CB-9127B
FILLING FILTER	CB-9126A	CB-9126B
EMERGENCY STOP-OIL PRESSURE PUMP	PG-9102A-A01	PG-9102B-A01
EMERGENCY STOP-OIL CIRC. PUMP	PG-9101A-A01	PG-9101B-A01

IDENTIFICATION NO. FOR ICP AND VALVES	84-CS-9102A	84-CS-9102B
OIL SUPPLY LINE (XXXX)	7600	7602
OIL RETURN LINE (YYYY)	7601	7603
DRAIN LINE (ZZZZ)	6933	6934

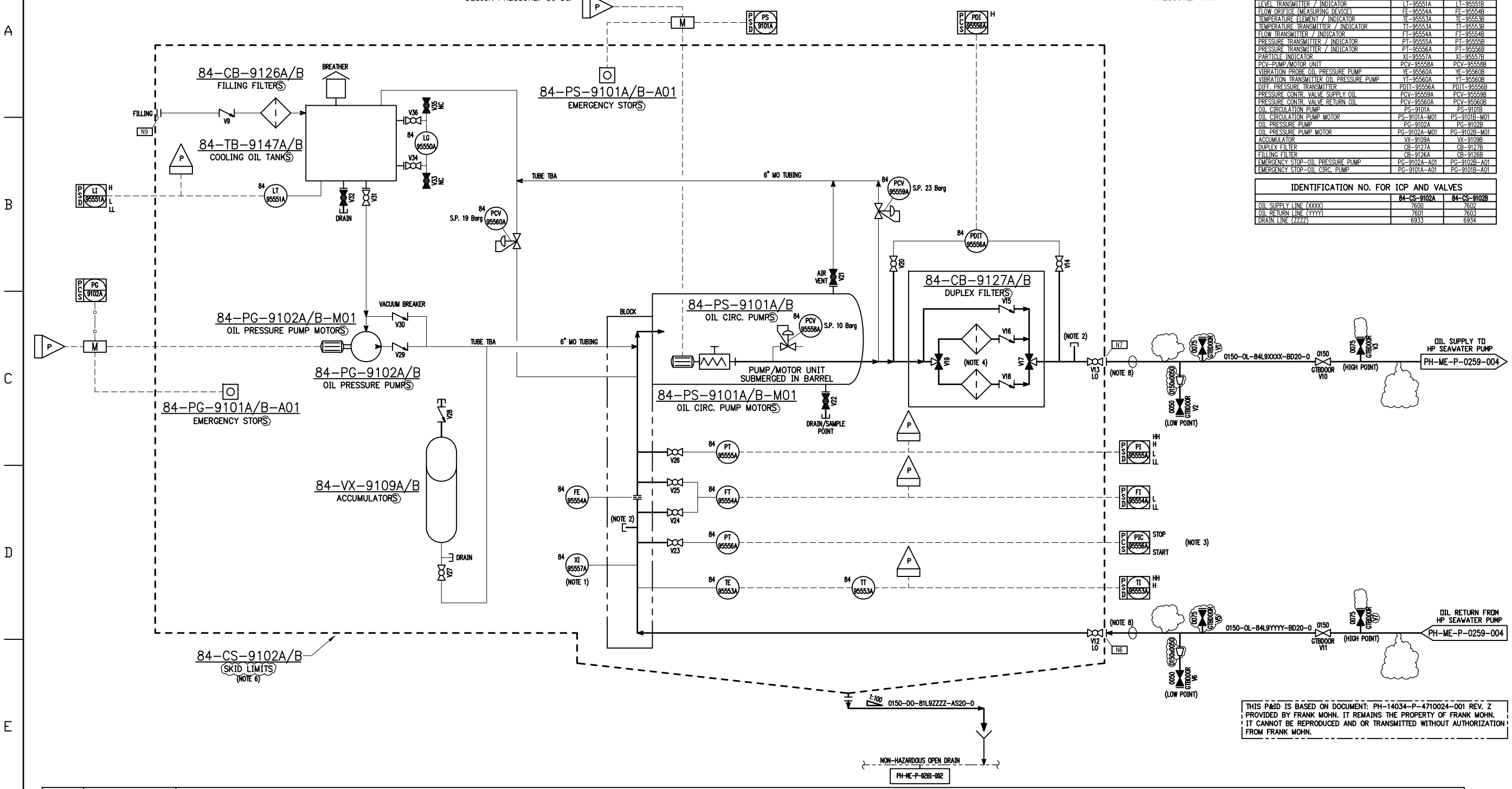

THIS P&ID IS BASED ON DOCUMENT: PH-14034-P-4710024-001 REV. Z PROVIDED BY FRANK MOHN. IT REMAINS THE PROPERTY OF FRANK MOHN. IT CANNOT BE REPRODUCED AND OR TRANSMITTED WITHOUT AUTHORIZATION FROM FRANK MOHN.

EQUIPMENT NO.	DESCRIPTION	MANUAL VALVES																																				
		V1	V2	V3	–	V5	V6	V7	–	V9	V10	V11	V12	V13	V14	V15	V16	V17	V18	V19	V20	V21	V22	V23	V24	V25	V26	V27	V28	V29	V30	V31	V32	V33	V34	V35	V36
84-CS-9102A	HP SW COOLING OIL PUMP SYSTEM	84-V-90956	84-V-90952	84-V-92994	–	84-V-92985	84-V-92986	84-V-92987	–	84-C-96583	84-V-97874	84-V-97876	84-V-96558	84-V-96559	84-V-96560	84-C-96561	84-C-96562	84-V-96563	84-C-96564	84-V-96565	84-V-96566	84-V-96567	81-V-96568	84-V-96569	84-V-96570	84-V-96571	84-V-96572	84-V-96573	84-C-96574	84-C-96575	84-C-96576	84-V-96577	81-V-96578	84-V-96579	84-V-96580	84-V-96581	84-V-96582
84-CS-9102B	HP SW COOLING OIL PUMP SYSTEM	84-V-90957	84-V-90953	84-V-92995	–	84-V-92989	84-V-92990	84-V-92991	–	84-C-97319	84-V-97875	84-V-97877	84-V-96584	84-V-96585	84-V-96586	84-C-96587	84-C-96588	84-V-96589	84-C-96590	84-V-96591	84-V-96592	84-V-96593	81-V-96594	84-V-96595	84-V-96596	84-V-96597	84-V-96598	84-V-96599	84-C-97310	84-C-97311	84-C-97312	84-V-97313	81-V-97314	84-V-97315	84-V-97316	84-V-97317	84-V-97318

NOTES:
1. MAGNETIC PARTICLE DETECTOR. CAN BE CHECKED IN RUNNING CONDITION. LOCAL INDICATION ONLY.
2. 'T' "WINDMESS" TEST CONNECTION.
3. START/STOP OF OIL PRESSURE PUMP 84-PG-9102 A/B MOTOR.
4. FILTER ELEMENT CAN BE CHANGED IN STAND BY AND RUNNING MODE.
5. DELETED.
6. INSTRUMENT TAGS SHOWN ARE FOR PUMP A ONLY. FOR PUMP B TAGS HAVE SUFFIX "B".
7. DELETED.
8. SAE 3000 PSI MATING FLANGES, PROVIDED BY VENDOR.

REV	DATE	BY	DESCRIPTION	CHK	ENGR	APPR	CLIENT
2	06OCT09	JDK	RE-ISSUED FOR CONSTRUCTION	RAK	RK/JL/PS	GMK	
1	22MAY09	JDK	RE-ISSUED FOR CONSTRUCTION	SRK	RK/JB/JL	GMK	
0	30OCT08	JDK	ISSUED FOR CONSTRUCTION	SRK	RK/JL/PS	SVS	

Wood Group Engineering (North Sea) Ltd.

MUSTANG INTERNATIONAL, LP
HOUSTON, TEXAS

PROJECT NO. 10910

bp

VALHALL
RE-DEVELOPMENT PROJECT
PIPING & INSTRUMENT DIAGRAM
HP SW COOLING OIL PUMP SYSTEM

REGISTRATION CODES			DRAWING NO.						SCALE
AREA	SYSTEM	TYPE	FACILITY CODE	ORIG.	DISP.	SEQ. No.	SHEET		NONE
U12-02	84	XB	PH	ME	P	0104	006	REV. 2	

Field for file specification:
Field for date and time :

A1

48-XX-9133
COOLING MEDIUM SKID

45-PA-9106 A/B
COOLING MEDIUM CIRCULATION PUMPS
CAPACITY: 1550 m3/h AT 7.5 DELTA BAR
DRIVER: 450 KW AT 1185 RPM
(2 X 100%)

45-XX-9133
SKID LIMIT

CONT ON DWG. PH-ME-P-0262-001

CONT ON DWG. PH-ME-P-0264-001 & PH-ME-P-0262-001

1600-WC-45L94366-AD20-0

TO 45-HB-9101A/B COOLING MEDIUM SEAWATER COOLERS
PH-ME-P-0264-001

1000-WC-45L94373-AD22-0

TO COOLING MEDIUM RETURN HEADER
PH-ME-P-0262-001

1000-WC-45L94368-AD22-0

1000-WC-45L94370-AD22-0

1000-WC-45L94509-AD20-0

1000-WC-45L94510-AD20-0

1600-WC-45L94369-AD20-0

0200-WC-45L94507-AD20-0

0200-WC-45L94508-AD20-0

2000-WC-45L94359-AD20-0

2000-WC-45L94365-AD20-0

FROM 45-VL-9101 COOLING MEDIUM EXPANSION TANK
PH-ME-P-0262-001

0100-DO-45L94367-AD20-0

0100-DO-45L94505-AD20-0

45-PA-9106A
(NOTE 3)

45-PA-9106B
(NOTE 3)

0400-DO-81L97001-AS20-0

0400-DO-81L96979-AS20-0

NON-HAZ. OPEN DRAINS
PH-ME-P-0281-002

NOTES:
1. TEMPORARY TOTE CONNECTION FOR DRAINING COOLING MEDIUM.
2. ELECTROMAGNETIC FLOWMETERS BETWEEN CONCENTRIC REDUCERS. PROVIDE STRAIGHT RUN OF 0D/0D PIPE DIAMETERS.
3. FOR CONDITION MONITORING INSTRUMENTATION SEE DRAWING PH-ME-P-0107-002/003.
4. REMOVABLE MAINENANCE SPOOL.
5. STANDBY PUMP TO START AUTOMATICALLY UPON MAIN PUMP FAILURE.
6. NON-SLAM CHECK VALVE.

REV	DATE	BY	DESCRIPTION	CHK	ENGR	APPR	CLIENT
4	16OCT09	JDK	RE-ISSUED FOR CONSTRUCTION	RAK	RK/JL/PS	GMK	
3	22MAY09	JDK	RE-ISSUED FOR CONSTRUCTION	SRK	RK/JB/JL	GMK	
2	01OCT08	JDK	RE-ISSUED FOR CONSTRUCTION	SRK	RK/PS/JK	SVS	
1	15APR08	JDK	RE-ISSUED FOR CONSTRUCTION	SRK	JC/JL/JB	RB	
0	01OCT07	JDK	ISSUED FOR CONSTRUCTION	SRK	JC/ES/JB	SVS	

Wood Group Engineering (North Sea) Ltd.

MUSTANG INTERNATIONAL, LP
HOUSTON, TEXAS

PROJECT NO. 10910

bp

VALHALL
RE-DEVELOPMENT PROJECT
PIPING & INSTRUMENT DIAGRAM
COOLING MEDIUM CIRC. PUMPS

REGISTRATION CODES			DRAWING NO.					SCALE
AREA	SYSTEM	TYPE	FACILITY CODE	ORIG.	DISP.	SEQ. No.	SHEET	NONE
U12-02	45	XB	PH	ME	P	0263	001	REV. 4

Field for file specification:
Field for date and time :

A1

MEI Project: 10910 - I:\10910\PID\WORKING P&ID FOLLOW-ON 2009\PH-ME-P-0290-001.DWG 09SEP09 0818 SF 25.4D IMP JTKELLE

48-HB-9106A
FWP HYDR. OIL / JACKET WATER HEAT EXCHANGER

MEDIUM	HOT SIDE: HYDR. OIL ISO VG32	COLD SIDE: SEA WATER	HOT SIDE: FRESH WATER
DUTY (KW)	213	1583	1370
TEMP. (°C)	55	16	95
DESIGN PRESS.	16	16	16
FLOW Kg/S	24	14	13.9

48-PH-9103A
FIREWATER LIFT PUMP

DUTY RATING: 628 kW
DUTY FLOW: 2300 m3/h
DIFF. HEAD: 67 m

48-DD-9101A
FIREWATER PUMP DIESEL ENGINE

RATING: 2105 kW
TYPE: MTU 16V4000
SPEED (RPM): 1850

48-VL-9105A
FWP SURGE TANK

VOLUME: 352 L
DESIGN PRESS.: 19 barg

48-PA-9117A
FIREWATER BOOSTER PUMP

DUTY RATING: 1109 kW
DUTY FLOW: 2300 m3/h
DIFF. HEAD: 110 m

48-HB-9107A
FWP CHARGE AIR HEAT EXCHANGER

MEDIUM	COLD SIDE: SEA WATER	HOT SIDE: FRESH WATER
DUTY (KW)	380	380
TEMP. (°C)	16	95
DESIGN PRESS.	16	16
FLOW m3/h	13	37

48-XD-9101A
FIREWATER PUMP PACKAGE A

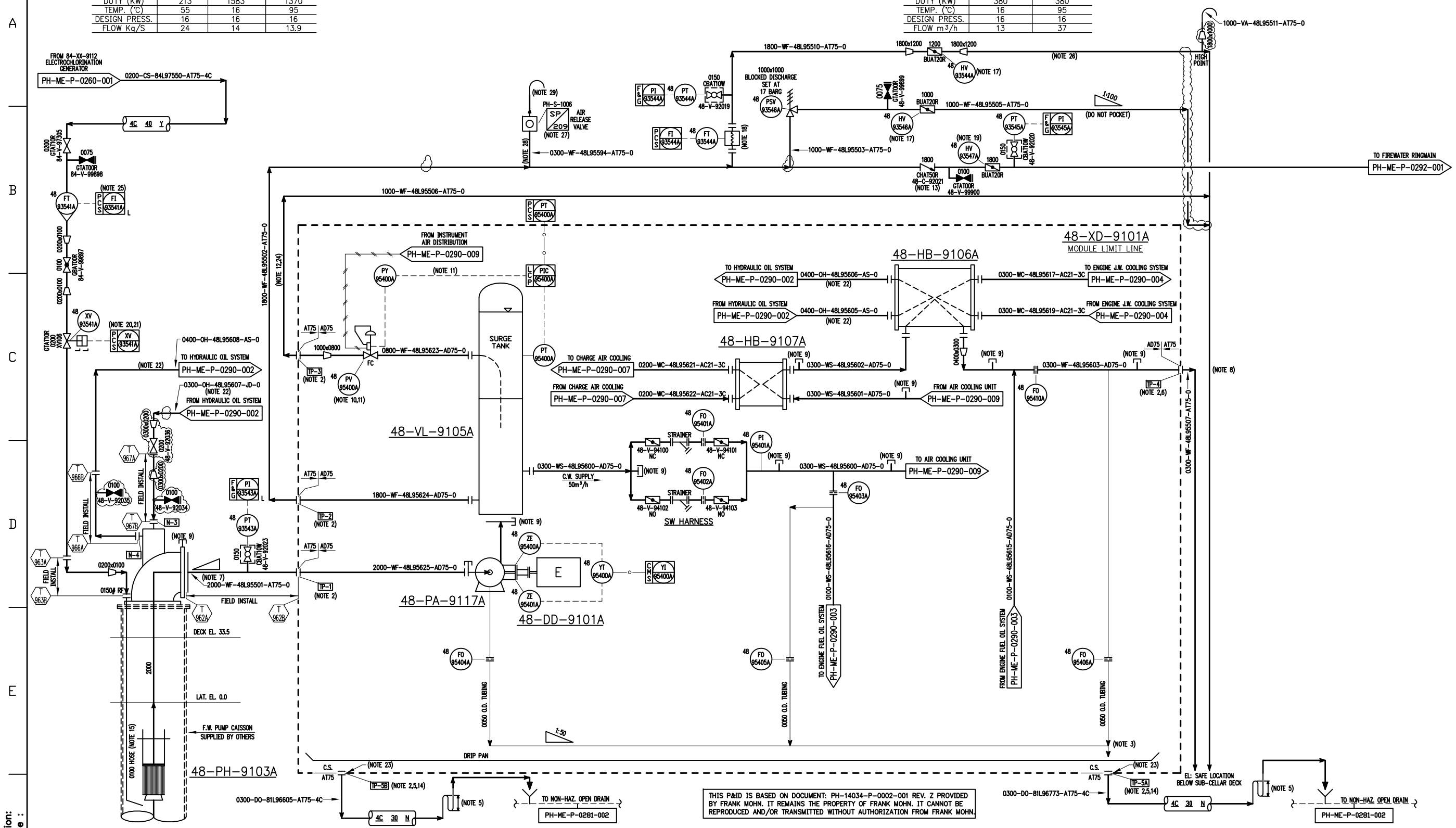

THIS P&ID IS BASED ON DOCUMENT: PH-14034-P-0002-001 REV. Z PROVIDED BY FRANK MOHN. IT REMAINS THE PROPERTY OF FRANK MOHN. IT CANNOT BE REPRODUCED AND/OR TRANSMITTED WITHOUT AUTHORIZATION FROM FRANK MOHN.

NOTES:
1. FOR INSTRUMENT LIST REF. VENDOR DWG: PH-14034-1-0001 (3674-002-4).
2. TP-X REFERS TO MODULE GEN. ARR. DWG. PH-14034-R-0004-001 (3674-024-2).
3. FOR DRAINAGE OF COOLING WATER SYSTEM AT STANDBY TO OPEN DRAIN INSIDE ENCLOSURE. WATERLOCK TUBE INSTALLED IN DOWNSTREAM PIPING.
4. MATERIAL:S FIREWATER PIPING UNS-S32750 (25Cr) COOLING WATER PIPING SUPER DUPLEX (25Cr) UPSTREAM HEAT EXCHANGER/TITANIUM DOWNSTREAM HEAT EXCHANGER). LIFT PUMP: SUPER DUPLEX S.S. (25Cr) BOOSTER PUMP: SUPER DUPLEX (25Cr). SURGE TANK: SUPER DUPLEX (25Cr). DRAIN PIPING TITANIUM. BUTTERFLY VALVES AND STRAINERS IN S.W. HARNESS DUCTILE IRON WITH PTFE LINING.
5. WATERLOCK TO BE INCLUDED IN DRAIN PIPING TO MAINTAIN 50 Pa OVERPRESSURE IN THE MODULE.
6. TO NON-HAZARDOUS OVERBOARD DRAIN. BACK PRESSURE DESIGN CRITERIA 0.5 BARG.
7. INTERCONNECTING FW PIPE TO BE PREFERABLY SLOPED. WATER TRAP TO BE AVOIDED.
8. PREVENT CONNECTION TO OTHER COOLING WATER SYSTEM TO AVOID BACKFLOW AT STAND-BY.
9. PLUGGED TEST CONNECTION.
10. COMBINED IP, MIN. FLOW AND AIR RELEASE/VACUUM BREAKER VALVE.
11. 48-PV-95400A WILL GO TO A PARTIAL OPEN PRESET POSITION UPON START AND STOP SIGNAL AT PUMP RUNNING THE PV-VALVE WILL START TO OPEN AT A PRESSURE CORRESPONDING TO RCD MINIMUM FLOW.
12. ROUTE PIPE TO VENTED DRAIN CAISSON. VALVE 48-PV-95400A WILL OPEN AND ACT AS SYSTEN VACUUM BREAKER AT PUMP STOP.
13. CHECK VALVE SHOULD BE LOCATED AS CLOSE AS POSSIBLE TO ENCLOSURE WALL.
14. TO NON-HAZARDOUS OPEN DRAIN.
15. HYPOCLORITE LINE MADE FROM CHEMICAL HOSE WITH TITANIUM NOZZLE AND TOP FLANGE.
16. DELETED.
17. KEY LOCKED VALVE.
18. MAGMETER, PROVIDE STRAIGHT RUN OF 5D UPSTREAM AND 2D DOWNSTREAM.
19. KEY INTERLOCKED VALVE.
20. VALVE XV-93545A TO CLOSE WHEN FIREWATER LIFT PUMP STOPS. VALVE WILL OPEN PERIODICALLY IN AUTOMATIC CONTROL TO ALLOW INJECTION OF HYPOCHLORITE SOLUTION INTO CASSION.
21. VALVE XV-93545A TO OPEN WHEN FIREWATER LIFT PUMP STARTS.
22. HYDRAULIC PIPING IS SUPPLIER'S STANDARD PIPE SPEC. SEE PH-ME-P-0290-002 FOR MORE DETAIL.
23. PACKAGE DRIP PAN DRAIN FLANGES ARE CARBON STEEL.
24. PIPEWORK TO RISE MINIMUM OF 5M ABOVE PV-95400A.
25. REFER TO DOCUMENT VRD-MC-P-0042 FOR OPERATING DETAILS.
26. PIPEWORK TO RISE MINIMUM OF 5M DOWNSTREAM OF HV-93544A.
27. AIR RELEASE VALVE/VACUUM BREAKER TO BE MOUNTED VERTICALLY.
28. LOCATE AT HIGHEST POSSIBLE LOCATION AND AS CLOSE TO THE CHECK VALVE AS POSSIBLE.
29. VENT TO SAFE LOCATION.

REV	DATE	BY	DESCRIPTION	CHK	ENGR	APPR	CLIENT
5	08SEP09	JDK	RE-ISSUED FOR CONSTRUCTION	RAK	RK/JL/PS	GMK	
4	22MAY09	JDK	RE-ISSUED FOR CONSTRUCTION	SRK	RK/JB/JL	GMK	
3	14NOV08	CDB	RE-ISSUED FOR CONSTRUCTION	SRK	RK/JL/PS	SVS	
2	28APR08	JDK	RE-ISSUED FOR CONSTRUCTION	SRK	JC/JL/PS	SVS	
1	15APR08	JDK	RE-ISSUED FOR CONSTRUCTION	SRK	JC/JL/JB	RB	
0	010CT07	JDK	ISSUED FOR CONSTRUCTION	SRK	JC/ES/JB	SVS	

Field for file specification:
Field for date and time :

Wood Group Engineering (North Sea) Ltd.

MUSTANG INTERNATIONAL, LP
HOUSTON, TEXAS

PROJECT NO. 10910

bp

VALHALL
RE-DEVELOPMENT PROJECT
PIPING & INSTRUMENT DIAGRAM
FIREWATER & SEAWATER COOLING SYSTEM

REGISTRATION CODES			DRAWING NO.					SCALE
AREA	SYSTEM	TYPE	FACILITY CODE	ORIG.	DISP.	SEQ. No.	SHEET	NONE
U12-02	48	XB	PH	ME	P	0290	001	REV. 5

A1

48-PH-9103B
FIREWATER LIFT PUMP

DUTY RATING: 628 kW
DUTY FLOW: 2300 m3/h
DIFF. HEAD: 67 m

48-DD-9101B
FIREWATER PUMP DIESEL ENGINE

RATING: 2105 kW
TYPE: MTU 16V4000
SPEED (RPM): 1850

48-PA-9117B
FIREWATER BOOSTER PUMP

DUTY RATING: 1109 kW
DUTY FLOW: 2300 m 3/h
DIFF. HEAD: 110 m

48-VL-9105B
FWP SURGE TANK

VOLUME: 352 L
DESIGN PRESS.: 19 barg

48-HB-9106B
FWP HYDR. OIL / JACKET WATER HEAT EXCHANGER

MEDIUM	HOT SIDE: HYDR. OIL ISO VG32	COLD SIDE: SEA WATER	HOT SIDE: FRESH WATER
DUTY (KW)	213	1583	1370
TEMP. (°C)	55	16	95
DESIGN PRESS.	16	16	16
FLOW Kg/S	24	14	13.9

48-HB-9107B
FWP CHARGE AIR HEAT EXCHANGER

MEDIUM	COLD SIDE: SEA WATER	HOT SIDE: FRESH WATER
DUTY (KW)	380	380
TEMP. (°C)	16	95
DESIGN PRESS.	16	16
FLOW m3/h	13	37

48-XD-9101B
FIREWATER PUMP PACKAGE B

FROM 84-XX-9112 ELECTROCHLORINATION GENERATOR
PH-ME-P-0260-001
0200-CS-84L97549-AT75-4C
4C 40 Y
0200 GTAT10R 84-V-97304
0075 GTAT00R 84-V-99902
0200x0100
0100 GBAT00R 84-V-99901
0200x0100
GTAT10R 0200 XV106
48 XV 93541B (NOTE 20,21)
P C S XV 93541B
0400-OH-48L95708-AS-0
TO HYDRAULIC OIL SYSTEM
PH-ME-P-0291-002
(NOTE 22)
0300-OH-48L95707-JD-0 (NOTE 22)
FROM HYDRAULIC OIL SYSTEM
PH-ME-P-0291-002
0300x0200
0200 48-V-92033
T 969A
T 968B
T 968A
T 965A
T 965B
FIELD INSTALL
0100 48-V-98998
0300x0200
N-3
N-4
0200x0100
0150 RF
(NOTE 9)
(NOTE 7)
2000-WF-48L95515-AT75-0
FIELD INSTALL
T 964A
T 964B
DECK EL. 33.5
2000
LAT. EL. 0.0
0100 HOSE (NOTE 15)
F.W. PUMP CAISSON SUPPLIED BY OTHERS
48-PH-9103B
48 PT 93543B
F G PI 93543B
0150 GBAT10R 48-V-92028
AT75 AD75
TP-1 (NOTE 2)
TP-2 (NOTE 2)
1000x1000 BLOCKED DISCHARGE SET AT 17 BARG
48 PSV 93546B
0075 GTAT00R 48-V-99903
1000 BUAT20R
1000-WF-48L95518-AT75-0
1:100
(DO NOT POCKET)
48 HV 93546B (NOTE 17)
1800-WF-48L95523-AT75-0
1800x1200 1200 1800x1200
BUAT20R
0150 CBAT10W 48-V-92024
48 PT 93544B
F G PI 93544B
48 FT 93544B
P C S FI 93544B
(NOTE 18)
48 HV 93547B (NOTE 19)
1800 CHAT50R 48-C-92026 (NOTE 13)
0100 GTAT00R 48-V-99904
1800 BUAT20R
48 PT 93545B
F G PI 93545B
0150 CBAT10W 48-V-92025
1000-WF-48L95517-AT75-0
(NOTE 29)
PH-S-1007 SP 209 AIR RELEASE VALVE
(NOTE 27)
(NOTE 28)
0300-WF-48L95595-AT75-0
(NOTE 26)
1000-VA-48L95512-AT75-0
1800x1000
HIGH POINT
TO FIREWATER RINGMAIN
PH-ME-P-0292-001
1000-WF-48L95519-AT75-0
1800-WF-48L95516-AT75-0 (NOTE 12,24)
P C S PT 95400B
FROM INSTRUMENT AIR DISTRIBUTION
PH-ME-P-0291-009
(NOTE 11)
PY 95400B
L C S PIC 95400B
SURGE TANK
1000x0800
AT75 AD75
48 PV 95400B (NOTE 10,11)
FC
0800-WF-48L95723-AD75-0
PT 95400B
TO CHARGE AIR COOLING
PH-ME-P-0291-007
0200-WC-48L95721-AC21-3C
FROM CHARGE AIR COOLING
PH-ME-P-0291-007
0200-WC-48L95722-AC21-3C
48-HB-9107B
(NOTE 9)
0300-WS-48L95702-AD75-0
0300-WS-48L95701-AD75-0
FROM AIR COOLING UNIT
PH-ME-P-0291-009
48 FO 95401B
48-HB-9106B
TO HYDRAULIC OIL SYSTEM
PH-ME-P-0291-002
0400-OH-48L95706-AS-0
(NOTE 22)
FROM HYDRAULIC OIL SYSTEM
PH-ME-P-0291-002
0400-OH-48L95705-AS-0
(NOTE 22)
0300-WC-48L95717-AC21-3C
TO ENGINE J.W. COOLING SYSTEM
PH-ME-P-0291-004
0300-WC-48L95719-AC21-3C
FROM ENGINE J.W. COOLING SYSTEM
PH-ME-P-0291-004
0400x0300
(NOTE 9)
AD75 AT75
0300-WF-48L95703-AD75-0
(NOTE 8)
TP-4 (NOTE 2,6)
48 FO 95410B
0300-WF-48L95520-AT75-0
48-VL-9105B
48 FO 95401B
STRAINER
48-V-94150 NC
48-V-94151 NC
48-V-94152 NO
48-V-94153 NO
SW HARNESS
48 PI 95401B
(NOTE 9)
0300-WS-48L95700-AD75-0
TO AIR COOLING UNIT
PH-ME-P-0291-009
C.W. SUPPLY 50m³/h
48 FO 95402B
48 FO 95403B
1800-WF-48L95524-AD75-0
(NOTE 9)
2000-WF-48L95725-AD75-0
48 ZE 95400B
E
48 YT 95400B
C S Y1 95400B
48 ZE 95401B
48-PA-9117B
48-DD-9101B
0100-WS-48L95716-AD75-0
TO ENGINE FUEL OIL SYSTEM
PH-ME-P-0291-003
0100-WS-48L95715-AD75-0
FROM ENGINE FUEL OIL SYSTEM
PH-ME-P-0291-003
48 FO 95404B
48 FO 95405B
48 FO 95406B
0050 O.D. TUBING
1:50
DRIP PAN
(NOTE 3)
C.S. AT75 (NOTE 23) TP-5A (NOTE 2,5,14)
4C 30 N
(NOTE 5)
NON-HAZ. OPEN DRAIN
PH-ME-P-0281-002
0300-DO-81L96606-AT75-4C
C.S. AT75 (NOTE 23) TP-5B (NOTE 2,5,14)
0300-DO-81L96774-AT75-4C
4C 30 N
(NOTE 5)
EL: SAFE LOCATION BELOW CELLAR DECK
NON-HAZ. OPEN DRAIN
PH-ME-P-0281-002
48-XD-9101B
MODULE LIMIT LINE

THIS P&ID IS BASED ON DOCUMENT: PH-14034-P-0012-001 REV. Z1 PROVIDED BY FRANK MOHN. IT REMAINS THE PROPERTY OF FRANK MOHN. IT CANNOT BE REPRODUCED AND/OR TRANSMITTED WITHOUT AUTHORIZATION FROM FRANK MOHN.

Field for file specification:
Field for date and time :

NOTES:
1. FOR INSTRUMENT LIST REF VENDOR DWG: PH-14034-1-0001 (1674-002-E).
2. (TP-X) REFERS TO MODULE GEN. ARR. DWG. PH-14034-R-0030-001 (1674-114-I).
3. FOR DRAINAGE OF COOLING WATER SYSTEM AT STANDBY TO OPEN DRAIN INSIDE ENCLOSURE. WATERLOCK TUBE INSTALLED IN DOWNSTREAM PIPING.
4. MATERIALS: FIREWATER PIPING UNS-S32750 (2507) COOLING WATER PIPING SUPER DUPLEX (2507) UPSTREAM HEAT EXCHANGER/TITANIUM DOWNSTREAM HEAT EXCHANGER. LIFT PUMP: SUPER DUPLEX S.S. (2507) BOOSTER PUMP: SUPER DUPLEX (2507) SURGE TANK: SUPER DUPLEX (2507) DRAIN PIPING TITANIUM BUTTERFLY VALVES AND STRAINERS IN S.W. HARNESS DUCTILE IRON WITH PTFE LINING.
5. WATERLOCK TO BE INCLUDED IN DRAIN PIPING TO MAINTAIN 50 Pa OVERPRESSURE IN THE MODULE.
6. TO NON-HAZARDOUS OVERBOARD DRAIN. BACK PRESSURE DESIGN CRITERIA 0.5 BARG.
7. INTERCONNECTING FW PIPE TO BE PREFERABLY SLOPED. WATER TRAP TO BE AVOIDED.
8. PREVENT CONNECTION TO OTHER COOLING WATER SYSTEM TO AVOID BACKFLOW AT STAND-BY.
9. PLUGGED TEST CONNECTION.
10. COMBINED P. MIN. FLOW AND AIR RELEASE/VACUUM BREAKER VALVE.
11. 48-PV-95400B WILL GO TO A PARTIAL OPEN PRESET POSITION UPON START AND STOP SIGNAL AT PUMP RUNNING THE PV-VALVE WILL START TO OPEN AT A PRESSURE CORRESPONDING TO RCD MINIMUM FLOW.
12. ROUTE PIPE TO VENTED DRAIN CASSION. VALVE 48-PV-95400B WILL OPEN AND ACT AS SYSTEM VACUUM BREAKER AT PUMP STOP.
13. CHECK VALVE SHOULD BE LOCATED AS CLOSE AS POSSIBLE TO ENCLOSURE WALL.
14. TO NON-HAZARDOUS OPEN DRAIN.
15. HYPOCHLORITE LINE MADE FROM CHEMICAL HOSE WITH TITANIUM NOZZLE AND TOP FLANGE.
16. DELETED.
17. KEY LOCKED VALVE.
18. MANIFOLD, PROVIDE STRAIGHT RUN OF 5D UPSTREAM AND 2D DOWNSTREAM.
19. KEY INTERLOCKED VALVE.
20. VALVE XV-93545A TO CLOSE WHEN FIREWATER LIFT PUMP STOPS. VALVE WILL OPEN PERIODICALLY IN AUTOMATIC CONTROL TO ALLOW INJECTION OF HYPOCHLORITE SOLUTION INTO CASSION.
21. VALVE XV-93545A TO OPEN WHEN FIREWATER LIFT PUMP STARTS.
22. HYDRAULIC PIPING IS SUPPLIER'S STANDARD PIPE SPEC. SEE PH-ME-P-0290-002 FOR MORE DETAIL.
23. PACKAGE DRIP PAN DRAIN FLANGES ARE CARBON STEEL.
24. PIPEWORK TO RISE MINIMUM OF 5M ABOVE PV-95400A.
25. REFER TO DOCUMENT V161-MC-P-0042 FOR OPERATING DETAILS.
26. PIPEWORK TO RISE MINIMUM OF 5M DOWNSTREAM OF HV-92544A.
27. AIR RELEASE VALVE/VACUUM BREAKER TO BE MOUNTED VERTICALLY.
28. LOCATE AT HIGHEST POSSIBLE LOCATION AND AS CLOSE TO THE CHECK VALVE AS POSSIBLE.
29. VENT TO SAFE LOCATION.

REV	DATE	BY	DESCRIPTION	CHK	ENGR	APPR	CLIENT
5	08SEP09	JDK	RE-ISSUED FOR CONSTRUCTION	RAK	RK/JL/PS	GMK	
4	22MAY09	JDK	RE-ISSUED FOR CONSTRUCTION	SRK	RK/JB/JL	GMK	
3	14NOV08	CDB	RE-ISSUED FOR CONSTRUCTION	SRK	RK/JL/PS	SVS	
2	28APR08	JDK	RE-ISSUED FOR CONSTRUCTION	SRK	JC/JL/PS	SVS	
1	15APR08	JDK	RE-ISSUED FOR CONSTRUCTION	SRK	JC/JL/JB	RB	
0	010CT07	JDK	ISSUED FOR CONSTRUCTION	SRK	JC/ES/JB	SVS	

Wood Group Engineering (North Sea) Ltd.

MUSTANG INTERNATIONAL, LP
HOUSTON, TEXAS

PROJECT NO. 10910

bp

VALHALL
RE-DEVELOPMENT PROJECT
PIPING & INSTRUMENT DIAGRAM
FIREWATER & SEAWATER COOLING SYSTEM

REGISTRATION CODES			DRAWING NO.					SCALE
AREA	SYSTEM	TYPE	FACILITY CODE	ORIG.	DISP.	SEQ. No.	SHEET	NONE
U12-02	48	XB	PH	ME	P	0291	001	REV. 5

A1

11-PA-9101A/B

OIL BOOSTER PUMP (2x100%)
CAPACITY: 795 m^3/h AT 6.2 DELTA BAR
DRIVER: 200 KW 1175 RPM

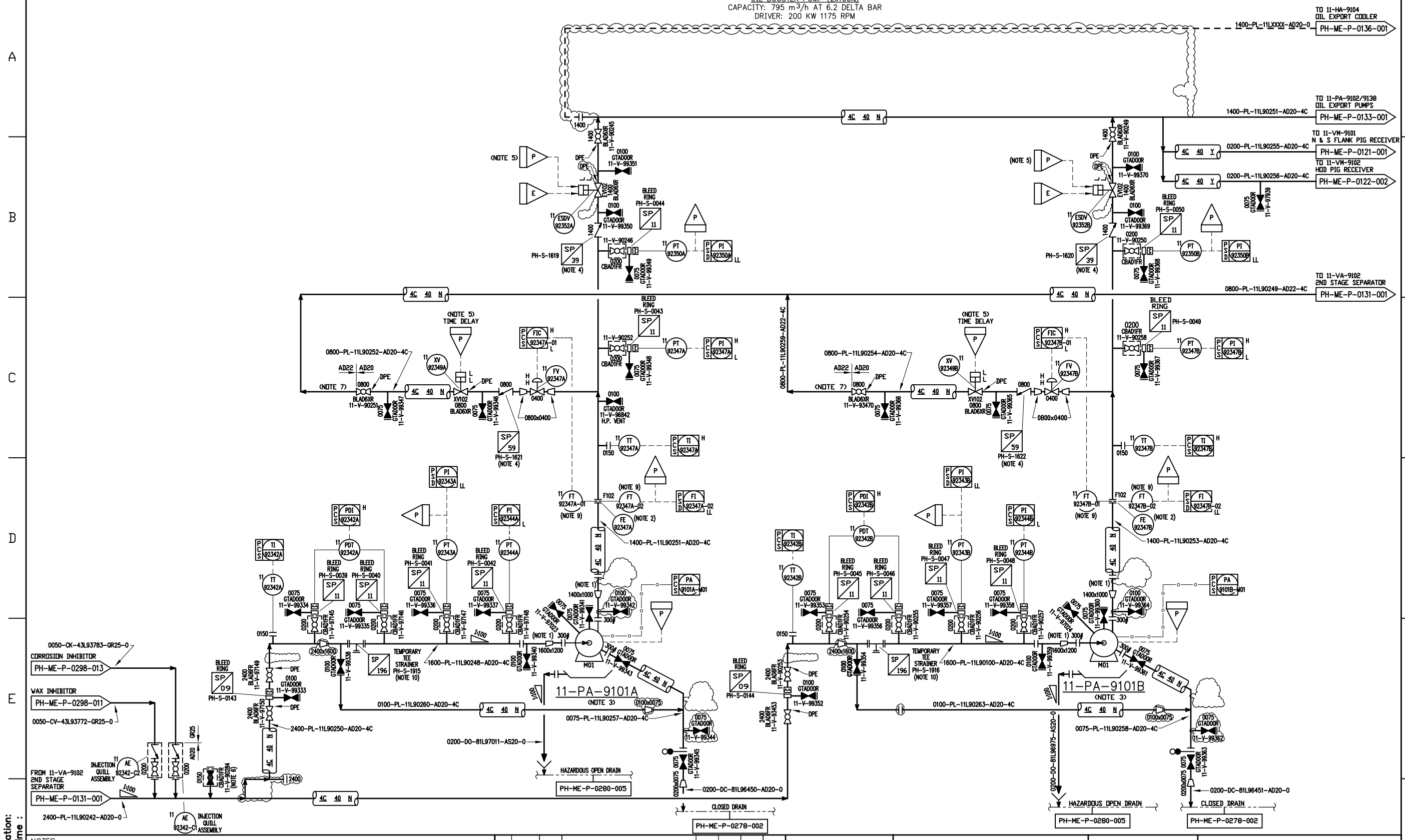
TO 11-HA-9104 OIL EXPORT COOLER
1400-PL-11LXXXX-AD20-0
PH-ME-P-0136-001
TO 11-PA-9102/9138 OIL EXPORT PUMPS
1400-PL-11L90251-AD20-4C
PH-ME-P-0133-001
TO 11-VM-9101 N & S FLANK PIG RECEIVER
0200-PL-11L90255-AD20-4C
PH-ME-P-0121-001
TO 11-VM-9102 HOD PIG RECEIVER
0200-PL-11L90256-AD20-4C
PH-ME-P-0122-002
TO 11-VA-9102 2ND STAGE SEPARATOR
0800-PL-11L90249-AD22-4C
PH-ME-P-0131-001
11-PA-9101A
(NOTE 3)
11-PA-9101B
(NOTE 3)
0050-CK-43L93783-GR25-0
CORROSION INHIBITOR
PH-ME-P-0298-013
VAX INHIBITOR
PH-ME-P-0298-011
0050-CV-43L93772-GR25-0
FROM 11-VA-9102 2ND STAGE SEPARATOR
PH-ME-P-0131-001
2400-PL-11L90242-AD20-0
HAZARDOUS OPEN DRAIN
PH-ME-P-0280-005
CLOSED DRAIN
PH-ME-P-0278-002
0200-DC-81L96450-AD20-0
0200-DC-81L96451-AD20-0
0200-DO-81L97011-AS20-0
0200-DO-81L96975-AS20-0
0100-PL-11L90260-AD20-4C
0100-PL-11L90263-AD20-4C
0075-PL-11L90257-AD20-4C
0075-PL-11L90258-AD20-4C
2400-PL-11L90250-AD20-4C
1600-PL-11L90248-AD20-4C
1600-PL-11L90100-AD20-4C
1400-PL-11L90251-AD20-4C
1400-PL-11L90253-AD20-4C
0800-PL-11L90252-AD20-4C
0800-PL-11L90254-AD20-4C
0800-PL-11L90259-AD22-4C
PH-S-1619
PH-S-1620
PH-S-1621
PH-S-1622
PH-S-0143
PH-S-0144
PH-S-1915
PH-S-1916
11-V-90245
11-V-90249
11-V-90246
11-V-90250
11-V-90252
11-V-90253
11-V-90254
11-V-90255
11-V-90256
11-V-90258
11-V-90259
11-V-90260
11-V-90261
11-V-90262
11-V-90263
11-V-90264
11-V-90265
11-V-90266
11-V-90267
11-V-90268
11-V-90269
11-V-90270
11-V-90271
11-V-90272
11-V-90273
11-V-90274
11-V-90275
11-V-90276
11-V-90277
11-V-90278
11-V-90279
11-V-90280
11-V-90281
11-V-90282
11-V-90283
11-V-90284
11-V-90285
11-V-90286
11-V-90287
11-V-90288
11-V-90289
11-V-90290
11-V-90291
11-V-90292
11-V-90293
11-V-90294
11-V-90295
11-V-90296
11-V-90297

NOTES:
1. REMOVABLE MAINTENANCE SPOOL.
2. CONDITIONING ORIFICE PLATE. PROVIDE STRAIGHT RUN OF 2D UPSTREAM AND 2D DOWNSTREAM. MOUNT IN VERTICAL PIPE, FLOW UP.
3. FOR CONDITION MONITORING INSTRUMENTATION, SEE DWG. PH-ME-P-0107-008 AND PH-ME-P-0107-009.
4. NON-SLAM AXIAL CHECK VALVE LOCATE AS CLOSE AS POSSIBLE TO PUMP DISCHARGE.
5. XV-92369A/B AND XV-92372A/B TO AUTOMATICALLY CLOSE WHEN CORRESPONDING PUMP SHUTS DOWN, AND TO AUTOMATICALLY OPEN WHEN CORRESPONDING PUMP STARTS.
6. FUTURE PSV CONNECTION.
7. DELETED.
8. A/B VALVE SET TO BE SELECTED BY PUMP RUNNING STATUS.
9. TWO 0050 SIZE FLANGED GATE VALVES, GTD0001, FOR EACH 2H, 11-FT-92367A-01/02, 11-FT-92367B-01/02, (TOTAL 8 VALVES) - BY PIPING. (SEE DETAIL F102 ON P&ID PH-ME-P-0102-001).

Field for file specification:
Field for date and time :

REV	DATE	BY	DESCRIPTION	CHK	ENGR	APPR	CLIENT
0	01OCT07	JDK	ISSUED FOR CONSTRUCTION	SD	JC/ES/AB	SVS	
1	04APR08	JDK	RE-ISSUED FOR CONSTRUCTION	RM	JL/PS	SVS	
2	15OCT08	JAB	RE-ISSUED FOR CONSTRUCTION	RM	RK/PS/JL	RAB	
3	22MAY09	JDK	RE-ISSUED FOR CONSTRUCTION	CC	RK/AB/JL	GMK	
4	16OCT09	JDK	RE-ISSUED FOR CONSTRUCTION	RAK	RK/JL/PS	GMK	

Wood Group Engineering (North Sea) Ltd.

MUSTANG INTERNATIONAL, LP
HOUSTON, TEXAS

PROJECT NO. 10910

AREA	SYSTEM	TYPE	SEQ. No.	SHEET
T34-02	11	XB		

FACILITY CODE	ORG.	DISP.
PH	ME	P 0133 001

REGISTRATION CODES

DRAWING NO.

VALHALL
RE-DEVELOPMENT PROJECT
PIPING & INSTRUMENT DIAGRAM
OIL EXPORT PUMPS

SCALE: NONE
REV.: 4

11-XX-9125
OIL EXPORT PUMP VALVE SKID

11-PA-9102
OIL EXPORT PUMP
CAPACITY: 795 m³/h AT 31.5 DELTA BAR
DRIVER: 1950 KW AT 3577 RPM

11-PA-9138
HP OIL EXPORT PUMP
CAPACITY: 795 m³/h AT 61.5 DELTA BAR
DRIVER: 1950 KW AT 3577 RPM

MEI Project: 10910 – I:\10910\PID\WORKING P&ID FOLLOW-ON 2009\PH-ME-P-0151-001.DWG 15OCT09 1147 SF 25.40 IMP J1KELLE

23-XX-9105
1ST STAGE SUCTION/DISCHARGE COOLER SKID

23-HA-9103
1ST STAGE SUCTION COOLER

DUTY: 2108 kW
TYPE: SHELL AND TUBE
DESIGN SHELL: 14 BARG AT 150°C
OPERATING SHELL: 7.0 BARG AT 20.0°C
DESIGN TUBE: 10.8 BARG AT 150°C (–28°C MIN)
OPERATING TUBE: 3.87 BARG AT 49.5°C
MATERIAL: SHELL: 22 CR DUPLEX
TUBE: 22 CR DUPLEX

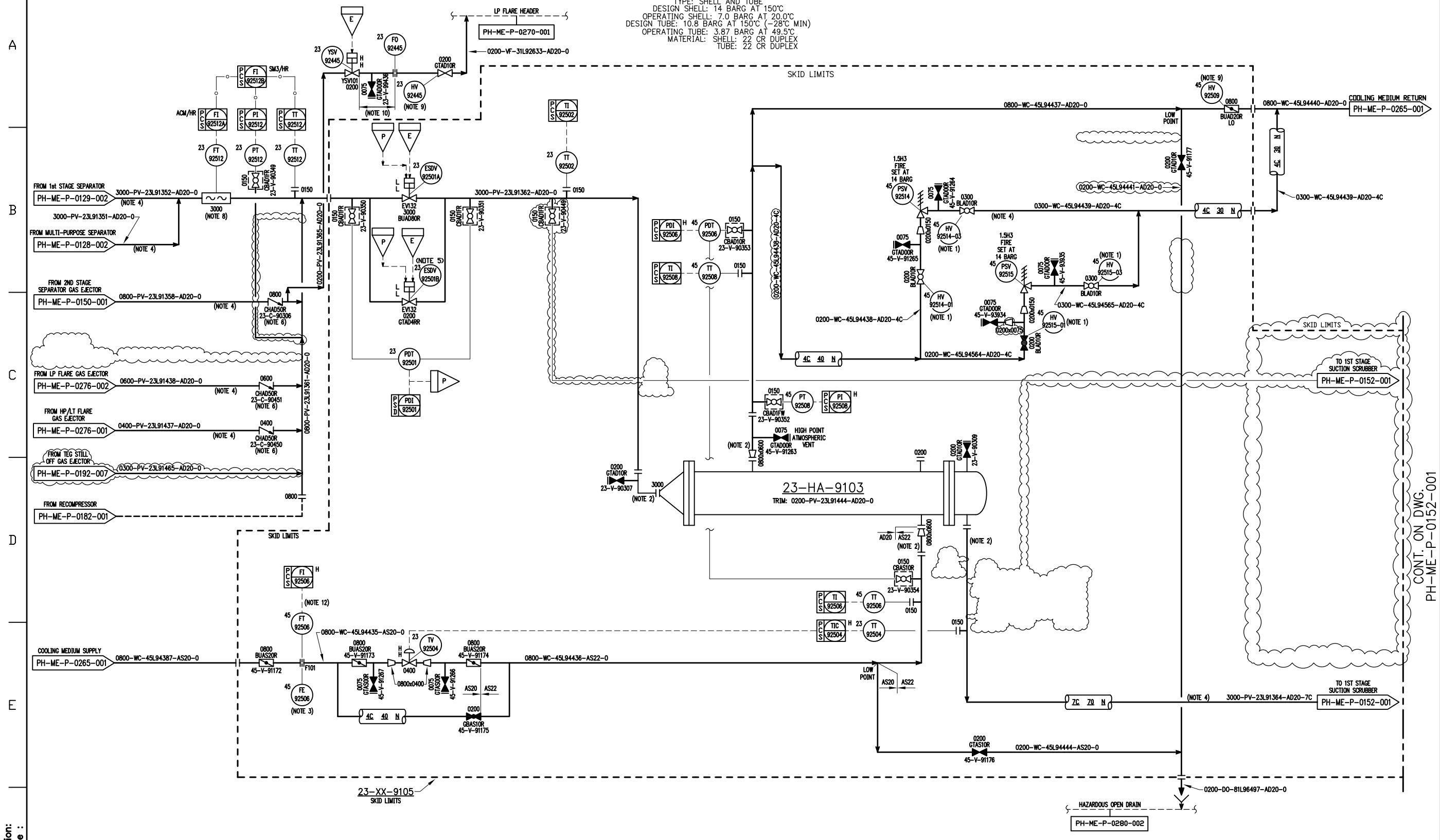

NOTES:
1. KEY INTERLOCKED VALVE.
2. REMOVABLE MAINTENANCE SPOOL.
3. CONDITIONING PLATE. PROVIDE STRAIGHT RUN OF 2D UPSTREAM AND 2D DOWNSTREAM.
4. DO NOT PICKET.
5. 2" EQUALIZATION VALVE PARALLEL TO ESDV VALVE.
6. ANTI-SLAM DESIGN.
7. VALVE WILL BE LOCATED AS CLOSE TO EXCHANGER AS PRACTICAL.
8. GAS ULTRASONIC METER. PROVIDED STRAIGHT RUN OF 7D UPSTREAM AND 3D DOWNSTREAM.
9. KEY LOCKED VALVE.
10. MINIMUM ONE METER SEPARATION.
11. DELETED.
12. TWO 0050 SIZE FLANGED GATE VALVES, GTAS00R, FOR EACH OF: 45-FT-92506 (TOTAL: 2 VALVES) - BY PIPING. SEE DETAIL F101 ON P&ID PH-ME-P-0102-001.

Field for file specification:
Field for date and time :

REV	DATE	BY	DESCRIPTION	CHK	ENGR	APPR	CLIENT
4	16OCT09	JDK	RE-ISSUED FOR CONSTRUCTION	RAK	RK/JL/PS	GMK	
3	22MAY09	JDK	RE-ISSUED FOR CONSTRUCTION	RAK	RK/JB/JL	GMK	
2	15OCT08	CDB	RE-ISSUED FOR CONSTRUCTION	RAK	RK/PS/JL	RAB	
1	09MAY08	JDK	RE-ISSUED FOR CONSTRUCTION	RAK	JC/PS/JL	SVS	
0	01OCT07	JDK	ISSUED FOR CONSTRUCTION	JTG	JC/ES/JB	SVS	

Wood Group Engineering (North Sea) Ltd.
MUSTANG INTERNATIONAL, LP
HOUSTON, TEXAS
PROJECT NO. 10910

bp

VALHALL
RE-DEVELOPMENT PROJECT
PIPING & INSTRUMENT DIAGRAM
1ST STAGE SUCTION COOLER

REGISTRATION CODES			DRAWING NO.					SCALE
AREA	SYSTEM	TYPE	FACILITY CODE	ORIG.	DISP.	SEQ. No.	SHEET	NONE
T33-02	23	XB	PH	ME	P	0151	001	REV. 4

A1

MEI Project: 10910 – I:\10910\PID\WORKING P&ID FOLLOWING ON 2009\PH-ME-P-0152-001.DWG 15OCT09 1146 SF 25.40 IMP JIKELLE

23-XX-9105
1st STAGE SUCTION./DISCHARGE COOLER SKID

23-VG-9101
1st STAGE SUCTION SCRUBBER
SIZE: 3.36M O.D. x 5.1M T/T
DESIGN: 10 BARG AT 135°C/-28°C
STEAM OUT: 10 BARG/FULL VAC. AT 185°C
OPERATING: 3.4 BARG AT 40°C
MATERIAL: 22 Cr DUPLEX

LP FLARE HEADER
PH-ME-P-0270-001
HP FLARE HEADER
PH-ME-P-0268-002
ATMOSPHERIC VENT HEADER
PH-ME-P-0267-001
PSD
CCP
E
0600-VF-31L92635-AD20-0
0600-PV-23L91379-AD20-0
0600-VF-31L92637-AS23-0 (NOTE 5)
8C 100 N (NOTE 5) 3000-PV-23L91372-AD20-8C
TO 1ST STAGE COMPRESSOR
PH-ME-P-0153-001
0600-PV-23L91613-AD23-0
0600-PV-23L91615-AD23-0
0400-PV-23L91371-AD20-0
0200-VA-31L92638-AD20-0
0400-PV-23L91391-AD20-0
0400-PV-23L91370-AD20-0
0200-PV-23L91620-AD20-0
3K4 FIRE SET AT 10 BARG
ISOKINETIC SAMPLE VALVE
CONT. ON DWG. PH-ME-P-0160-001
CONT. ON DWG. PH-ME-P-0151-001
FROM 23-V-90449
PH-ME-P-0151-001
SURGE CONTROL AND RECYCLE FROM 1ST STAGE DISCHARGE COOLER
PH-ME-P-0160-001
3000-PV-23L91386-AD20-7C
0200-GF-42L93527-AS20-0
BUY BACK GAS
PH-ME-P-0317-001
0200-GF-42L93520-AS20-0
FROM 1ST STAGE SUCTION COOLER
PH-ME-P-0151-001
3000-PV-23L91364-AD20-7C
3000-PV-23L91367-AD20-7C (NOTE 5)
0200-PV-23L91608-AD20-0
FROM 1ST STAGE COMPRESSOR
PH-ME-P-0155-001
WDM
FIELD INSTALL
WDB
23-XX-9105
SKID LIMITS
0075-PV-23L91610-AD20-0
0200-PV-23L91598-AD20-4C (NOTE 15)
0200-PL-23L91374-AD20-4C
0200-PL-23L91375-AD20-4C
0200-PL-23L91373-AD20-4C
0200-DC-81L96499-AD20-0
0075-PV-23L92639-AD20-0
0075-PV-23L91382-AD20-0
0075-PL-23L91445-AD20-4C
0075-PL-23L91459-AD20-4C
0200-PL-11L90285-AD20-4C
TO 2ND STAGE SEPARATOR
PH-ME-P-0131-001
CLOSED DRAIN HEADER
PH-ME-P-0278-001
PANEL HEALTH
TOP OF FOAM
TOP OF LIQUID
RADAR
PROFILE
OPTICAL
SOURCE
MAG
L1002
4C E Y
4C F Y
(NOTE 13)

LIQUID LEVELS FROM BOTTOMHEAD SEAM (MM)	
LSHH-92523	950
LSH-92529-03	950
LSH-92521	775
LSH-92529-02	775
LIC-92521	600
LSL-92521	425
LSL-92529-02	425
LSLL-92523	250

NOTES:
1. KEY INTERLOCKED VALVE.
2. LIQUID ULTRASONIC METER. PROVIDE STRAIGHT RUN OF 10D UPSTREAM AND 5D DOWNSTREAM.
3. LOCATE AS CLOSE TO THE VESSEL AS PRACTICAL.
4. MINIMUM 1 METER SEPARATION.
5. DO NOT POCKET.
6. KEY LOCKED VALVE.
7. N2 AND STEAM INJECTION AT 2" DRAIN VALVE.
8. INTERNALS.
9. ANTISLAM DESIGN.
10. SPADE & SPACER TYPE. PROVIDE SPADE STAND AT EACH LOCATION TO PREVENT MISPLACING SPADE.
11. 6" NOZZLE FOR PROFILER TO DETECT FOAMING. MOUNT NOZZLE 45° FROM THE VERTICAL.
12. SUPPORT DETAILS BY VESSEL VENDOR.
13. VESSEL SKIRT.
14. ACTUATOR TO HAVE TRAVEL STOP SET AT A POSITION EQUIVALENT TO CV=1500 (TO LIMIT CLOSURE).
15. 4C INSULATION IS NOT REQUIRED ON TRIM IN VAPOR SERVICE.

Field for file specification:
Field for date and time :

REV	DATE	BY	DESCRIPTION	CHK	ENGR	APPR	CLIENT
4	16OCT09	JDK	RE-ISSUED FOR CONSTRUCTION	RAK	RK/JL/PS	GMK	
3	22MAY09	JDK	RE-ISSUED FOR CONSTRUCTION	RAK	RK/JB/JL	GMK	
2	15OCT08	CDB	RE-ISSUED FOR CONSTRUCTION	RAK	RK/PS/JL	RAB	
1	09MAY08	JDK	RE-ISSUED FOR CONSTRUCTION	RAK	JC/PS/JL	SVS	
0	01OCT07	JDK	ISSUED FOR CONSTRUCTION	JTG	JC/ES/JB	SVS	

Wood Group Engineering (North Sea) Ltd.
MUSTANG INTERNATIONAL, LP
HOUSTON, TEXAS
PROJECT NO. 10910

bp

VALHALL
RE-DEVELOPMENT PROJECT
PIPING & INSTRUMENT DIAGRAM
1ST STAGE SUCTION SCRUBBER

REGISTRATION CODES			DRAWING NO.					SCALE
AREA	SYSTEM	TYPE	FACILITY CODE	ORIG.	DISP.	SEQ. No.	SHEET	NONE
T33-02	23	XB	PH	ME	P	0152	001	REV. 4

A1

23-XX-9106
1ST STAGE COMPRESSOR SKID

23-KA-9101
1ST STAGE COMPRESSOR
CAPACITY: 4.8MM SM3/D AT 8.9 DELTA BAR
DRIVER: 11000 kW AT 6300 RPM

FROM 1ST STAGE SUCTION SCRUBBER
PH-ME-P-0152-001
3000-PV-23L91372-AD20-8C
8C 100 N
(NOTE 5)
FIELD INSTALL
WDB
WDM
702A
702B
1:100
2000-PV-23L91453-AD20-8C
8C 100 N
2000x1600
1600
AD20
BD20
7C 70 N
1600-PV-23L91378-BD20-7C

HP FLARE HEADER
PH-ME-P-0268-002
1200-VF-31L92456-AS23-0
1000-VF-31L92459-AS23-0
1000-PV-23L91600-BD23-0
0600x0800 (FULL BORE) BLOCKED FLOW SET AT 26 BARG
PSV 92540
0075 GTBDOOR 23-V-99455
BD23 AS23
1000
1000x0800
GLBD3FR
1000-PV-23L91601-BD23-0
0600x0800 (FULL BORE) BLOCKED FLOW SET AT 26 BARG
PSV 92541
0075 GTBDOOR 23-V-99456
AS23 BD23
1200x1000
1000x0800
0800x0600
0075 GTBDOOR 23-V-99454
0075 GTBDOOR 23-V-99457
HV 92540-03 (NOTE 17)
HV 92541-03 (NOTE 17)
1000-VF-31L92910-AS23-0
0800 CB8D24R
HV 92540-01 (NOTE 17)
HV 92541-01 (NOTE 17)
0800-PV-23L91455-BD20-3D
0800-PV-23L91454-BD20-3D
1:100
(NOTE 5)
2400 (NOTE 9)
7C 70 N
SP 52
PH-S-1630
TI 92602
TT 92602
FIELD INSTALL
WDM
WDB
0150
0200 CB8D24R 23-V-99454 (NOTE 11)
703B
703A
TO 1ST STAGE DISCHARGE COOLER
PH-ME-P-0160-001
2400-PV-23L91377-BD20-7C

FROM 11-PIC-92155
PH-ME-P-0128-002
FROM 11-PIC-92205
PH-ME-P-0129-002
PY 921556

CCP
PSD FV 92542
PCS FC 92542
FZSL 92542
FZSH 92542
FY 92542-03
AIR VOL TANK 23
FVX 92542
FV 92542
AI
TI 92532
TT 92532
TI 92533
TT 92533
TI 92536
TT 92536
TI 92537
TT 92537
TI 92539
TT 92539
PDI 92530
PDT 92530
PDI 92534
PDT 92534
PH-S-1305 CONE STRAINER (NOTE 4)
SP 127
(NOTE 12)
300#
0150 CB8D1FR 23-V-90467
23-V-90335
23-V-90468
23-V-90336
23-V-99453
23-V-90337
23-V-90338
23-V-90339
23-V-90341
23-V-90342
23-V-90343
(NOTE 10)
(NOTE 15)
F102
FT 92537-01
FI 92537-01
FE 92537 (NOTE 3)
FT 92537-02
FI 92537-02
PI 92540
PT 92540
PI 92531
PT 92531
PI 92535
PT 92535
PI 92532
PT 92532
PI 92537
PT 92537
PI 92536
PT 92536
PI 92539
PT 92539
PI 92538
PT 92538
PI 92536
0200 (NOTE 6)
PH-S-2217 3200x3000 REDUCING FLANGE
SP 287
(NOTE 2)
PH-S-2301 NOISE SUPPRESSION ARRAY
SP 341
AD20
BD20
TP1
TP2
(NOTE 8)
CCP KA 9101
(NOTE 14)
(NOTE 13)
E
PMS
P
CCP-9101 COMPRESSOR PANEL
M07

23-XX-9106
SKID LIMITS
(NOTE 7)

23-KA-9101 (M) 23-KA-9101

NOTES:
1. PURGE VALVE.
2. REMOVABLE MAINTENANCE SPOOL.
3. CONDITIONING PLATE. PROVIDE STRAIGHT RUN OF 2D UPSTREAM AND 2D DOWNSTREAM.
4. LOCATE STRAINER AS CLOSE AS POSSIBLE TO COMPRESSOR SUCTION FLANGE.
5. DO NOT PICKET.
6. BORESCOPE CONNECTIONS MINIMUM DISTANCE FROM COMPRESSOR.
7. ALL ITEMS IN SKID BOUNDRY SUPPLY BY SKID VENDOR
8. LUBE OIL, SEAL GAS & VIB. TEMPT. DETAILS ON P&ID'S (0154, 0155, & 0156)
9. NON-SLAM AXIAL FLOW DESIGN.
10. COMPRESSOR SUCTION & DISCHARGE PIPING TO HAVE MIN. OF 3 DIA. STRAIGHT RUN.
11. DELETED.
12. MAINTENANCE DROP OUT SPOOL. DOWNSTREAM FLANGE TO BE BD20 SPEC FOR INSTALLATION OF STRAINER.
13. SHUTDOWN WITH BLOWDOWN (PH-PSD3-23-01B). SHUTDOWN WITHOUT BLOWDOWN (PH-PSD3-23-01).
14. INTERNODE (30-NX1-92XX1).
15. TWO 0050 SIZE FLANGED GATE VALVE, GTBDOOR, FOR EACH OF: 23-FT-92537-01 AND 23-FT-92537-02 (TOTAL 4 VALVES) — BY PIPING. SEE DETAIL F102 ON P&ID PH-ME-P-0102-001.
16. 23-PT-92540 IS USED TO CALCULATE SUCTION/SEAL PRESSURE DIFFERENTIAL PER MT'S C&E.
17. KEY INTERLOCKED VALVE.

NOTES:

REV	DATE	BY	DESCRIPTION	CHK	ENGR	APPR	CLIENT
4	16OCT09	JDK	RE-ISSUED FOR CONSTRUCTION	RAK	RK/JL/PS	GMK	
3	22MAY09	JDK	RE-ISSUED FOR CONSTRUCTION	RAK	RK/JB/JL	GMK	
2	15OCT08	JDK	RE-ISSUED FOR CONSTRUCTION	RAK	RK/PS/JL	RAB	
1	09MAY08	JDK	RE-ISSUED FOR CONSTRUCTION	RAK	JC/PS/JL	SVS	
0	01OCT07	JDK	ISSUED FOR CONSTRUCTION	JTG	JC/ES/JB	SVS	

Wood Group Engineering (North Sea) Ltd.
MUSTANG INTERNATIONAL, LP
HOUSTON, TEXAS
PROJECT NO. 10910

bp

VALHALL
RE-DEVELOPMENT PROJECT
PIPING & INSTRUMENT DIAGRAM
1ST STAGE COMPRESSOR

REGISTRATION CODES			DRAWING NO.					SCALE
AREA	SYSTEM	TYPE	FACILITY CODE	ORIG.	DISP.	SEQ. No.	SHEET	NONE
T43-02	23	XB	PH	ME	P	0153	001	REV. 4

Field for file specification:
Field for date and time :

A1

MEI Project: 10910 – I:\10910\PID\WORKING P&ID FOLLOW-ON 2009\PH-ME-P-0160-001.DWG 130CT09 1409 SF 25.4D IMP JTKELLE

23-XX-9105
1ST STAGE SUCTION/DISCHARGE COOLER SKID

23-HA-9114/9115
1st STAGE DISCHARGE COOLERS
DUTY: 15330 kW
TYPE: SHELL AND TUBE
DESIGN SHELL: 15.8 BARG/FV AT 150 °C
OPERATING SHELL: 5.0 BARG AT 20.12°C
DESIGN TUBE: 30 BARG/FULL VACUUM AT 175°C (–28°C MIN)
OPERATING TUBE: 12.0 BARG AT 119.7°C
MATERIAL: 22 Cr DUPLEX

HP FLARE HEADER
PH-ME-P-0268-002
0400-VF-31L92648-AS23-0
0400-VF-31L92481-AS23-0 (NOTE 6)

LP FLARE HEADER
PH-ME-P-0270-001
0300-VF-31L92647-AD20-0

FROM 1st STAGE COMPRESSOR
PH-ME-P-0153-001
2400-PV-23L91377-BD20-7C
2400-PV-23L91381-BD20-7C (NOTE 2,8)

3L4 FIRE SET AT 14 BARG
PSV 92613 (NOTE 13)
0075 GTADOOR 45-V-91360
HV 92613-03 (NOTE 1)
0400 BLAD10R
HV 92612-03 (NOTE 1)
0075 GTADOOR 45-V-91361
3L4 FIRE SET AT 14 BARG
PSV 92612 (NOTE 13)
HV 92612-02 (NOTE 1)
HV 92613-02 (NOTE 1)
0300 BLAD10R
0075 GTADOOR 45-V-93931
0400-WC-45L94556-AD23-0
0400-WC-45L94557-AD23-0
0075 GTADOOR 45-V-93932
HV 92613-01 (NOTE 1)
0300-WC-45L94433-AD20-4C
0300-WC-45L94424-AD20-4C
HV 92612-01 (NOTE 1)
4C 30 N
1C 50 N
1C 30 N
PI 92608 HH
PI 92608 H
PT 92608
PT 92609
P
0150 GBD01W 45-V-91188
0150 GBD01W 45-V-91187
(NOTE 4) HV 92609
0600 BUAD20R LO
0600-WC-45L94451-AD20-1C
HOT COOLING MEDIUM RETURN
PH-ME-P-0265-001
LOW POINT
1C 0
0200 GTAD10R 45-V-91188
0200-WC-45L94453-AD20-1C

PDI 92606 H
PDT 92606
0150 CBAD10R 45-V-91366
TT 92607A
TI 92607A
0150 CB6D1FR 23-V-90362
0200 GTAD10R ATMOSPHERIC VENT 45-V-91184
PDI 92602 H
PDT 92602 (NOTE 10)
(NOTE 2)
0600x0600
0600-WC-45L94450-AD20-1C

23-HA-9115
TUBE: 0200-PV-23L91447-BD20-3D
0200 GTBD10R 23-V-93653
0200 GTBD10R 23-V-93656
TI 92607B
TI 92603
0800
2400
0200
SHELL: 0200-WC-45L94487-AD20-0
23-HA-9114
TUBE: 0200-PV-23L91448-BD20-3D
0200 GTBD10R 23-V-93655
AD20
AS20
(NOTE 2)
2400x1800
0600x0600
0600-WC-45L94447-AS20-0
0150 GTAS10R 45-V-91365
0150 GBD01R 23-V-90364
1800-PV-23L91384-BD20-0
0200-PV-23L91385-BD20-0
1C 40 N

CCP FV 92543
CCP ZI 92543
CCP FIC 92543
FZSH 92543
FZSL 92543
ZI 92543
FV 92543
FVX 92543 AIR VOL. TANK
RECYCLE ANTI-SURGE VALVE (NOTE 7)
FY 92543-03
FY 92543 I/P
3000-PV-23L91386-AD20-7C
7C 70 N
SURGE CONTROL AND RECYCLE TO 1ST STAGE SUCTION SCRUBBER
PH-ME-P-0152-001
1800x1600
3000x1600
BD20 AD20
PSD
CCP
E
YSV 92545
FO 92545
(NOTE 4) HV 92545
YSV131 0200
0300 GTBD10R
0300-VF-31L92646-AD20-0 (NOTE 6)
0075 GTBD00R 23-V-93612
(NOTE 5)
0300x0200

P
PDT 92551
PDD 92551
PDT MEASUREMENT FROM 23-V-90367
PH-ME-P-0161-001
ESDV 92551A
0200 GBBD10R 23-V-90366
CHBD50R 23-C-90365
2400-PV-23L91383-BD20-7C (NOTE 6)
TO 2nd STAGE SUCTION SCRUBBER
PH-ME-P-0161-001
EV132 2400 BUBD20R
SP S1 PH-S-1631 (NOTE 9)
EV132 0200 GTBD10R
ESDV 92551B (NOTE 8)
0200-DO-81L96664-AD20-0
HAZARDOUS OPEN DRAIN
PH-ME-P-0280-002
0200-DO-81L96644-AD20-0
0200-DC-81L96505-BD20-0
CLOSED DRAIN
PH-ME-P-0278-001

23-XX-9105
SKID LIMITS

FI 92606 H
FT 92606 (NOTE 12)
FE 92606 (NOTE 3)
TI 92606
TT 92606
0150
AS20 AD20
LOW POINT
0200 GTAS10R 45-V-91182
0200-DO-81L96504-AD20-0
TIC 92604 H
TV 92604
TT 92604
COOLING MEDIUM SUPPLY
PH-ME-P-0265-001
0600-WC-45L94390-AS20-0
0600 BUAS20R 45-V-91178
F101
0600 BUAS20R 45-V-91179
0600x0400
0400
0600 BUAS20R 45-V-91180
0075 GTAS00R 45-V-91289
0200 GBAS10R 45-V-91181
0200-PV-23L91423-BD20-4C
0075 GTBD00R 23-V-93613
4C N
LOW POINT
0200 GTBD10R 23-V-90368
0200 GBBD10R 23-V-90369

NOTES:
1. KEY INTERLOCKED VALVE.
2. REMOVABLE MAINTANCE SPOOL.
3. CONDITIONING PLATE. PROVIDE STRAIGHT RUN OF 2D UPSTREAM AND 2D DOWNSTREAM.
4. KEY LOCKED VALVE.
5. MINIMUM 1 METER SEPARATION.
6. DO NOT POCKET.
7. LOCATE ANTI-SURGE VALVE AS CLOSE AS PRACTICAL TO TEE.
8. 2" EQUALIZATION VALVE PARALLEL TO SHUTDOWN VALVE.
9. DISSIMILAR CHECK VALVES.
10. TRANSMITTER TO BE MOUNTED OFF SKID ON WEATHER DECK DUE TO THE ELEVATION OF THE PDT TAPS ON SKID.
11. DELETED.
12. TWO 0050 GATE VALVES, GTAS00R, FOR EACH OF: 45-FT-92606 (TOTAL: 2 VALVES) – BY PIPING. SEE DETAIL F101 ON P&ID PH-ME-P-0102-001.
13. FIRE CASE IS THE GOVERNING CASE (EXCEEDS TUBE RUPTURE PROTECTION REQUIREMENT).

REV	DATE	BY	DESCRIPTION	CHK	ENGR	APPR	CLIENT
4	13OCT09	JDK	RE-ISSUED FOR CONSTRUCTION	RAK	RK/JL/PS	GMK	
3	22MAY09	JDK	RE-ISSUED FOR CONSTRUCTION	RAK	RK/JB/JL	GMK	
2	15OCT08	JDK	RE-ISSUED FOR CONSTRUCTION	RAK	RK/PS/JL	RAB	
1	09MAY08	JDK	RE-ISSUED FOR CONSTRUCTION	RAK	JC/PS/JL	SVS	
0	01OCT07	JDK	ISSUED FOR CONSTRUCTION	JTG	JC/ES/JB	SVS	

Wood Group Engineering (North Sea) Ltd.
MUSTANG INTERNATIONAL, LP
HOUSTON, TEXAS
PROJECT NO. 10910

bp

VALHALL
RE-DEVELOPMENT PROJECT
PIPING & INSTRUMENT DIAGRAM
1st STAGE DISCHARGE COOLER

REGISTRATION CODES			DRAWING NO.					SCALE
AREA	SYSTEM	TYPE	FACILITY CODE	ORIG.	DISP.	SEQ. No.	SHEET	NONE
T33-02	23	XB	PH	ME	P	0160	001	REV. 4

CONT. ON DWG. PH-ME-P-0152-001
CONT. ON DWG. PH-ME-P-0161-001

Field for file specification:
Field for date and time :

A1

MEI Project: 10910 - I:\10910\PID\WORKING P&ID FOLLOW-ON 2009\PH-ME-P-0161-001.DWG 15OCT09 1542 SF 25.40 IMP JIKELLE

23-XX-9105
1ST STAGE SUCTION/DISCHARGE COOLER SKID

23-VG-9102
2ND STAGE SUCTION SCRUBBER
SIZE: 2.7M I.D. x 4.5M T/T
DESIGN: 30 BARG AT 140°C/-46°C
OPERATING: 11.1 BARG AT 25.6°C
STEAMOUT: 10 BARG/FULL VAC AT 185°C
MATERIAL: 22CrDUPLEX

HP FLARE HEADER
PH-ME-P-0268-002
0800x0600
0600-VF-31L92649-AS23-0
0600-VF-31L92812-AS23-0 (NOTE 5)
0600-VF-31L92651-AS23-0 (NOTE 5)
4L6 CV FAILURE SET AT 30 BARG
23 PSV 92627
0075 GTBDOOR 23-V-99468
0600 BLBD3FR
23 HV 92627-03 (NOTE 1)
BD23 AS23
0075 GTBDOOR 23-V-99469
(NOTE 1) 23 HV 92628-03
4L6 CV FAILURE SET AT 30 BARG
23 PSV 92628
0075 GTBDOOR 23-V-99467
0400-PV-23L91467-BD20-0
0600-PV-23L91631-BD23-0
0600-PV-23L91632-BD23-0
0400-PV-23L91466-BD20-0
0400 CBBD3R 23-V-99472
23 HV 92627-01 (NOTE 1)
23 HV 92628-01 (NOTE 1)
0600x0400
PSD
CCP
E
0600-VF-31L92891-BD23-0
(NOTE 3) 23 HV 92626
23 FO 92626
23 YSV 92626
0800 BLBD3FR
0800x0600
YSV131 0600 BD20
0075 GTBDOOR 23-V-99470
AS23 BD23
ATMOSPHERIC VENT HEADER
PH-ME-P-0267-001
AS20 BD20
0200-VA-31L92650-BD20-0
0600-PV-23L91394-BD20-0
BUY BACK GAS
PH-ME-P-0317-001
0200-GF-42L93515-BS20-0
0200 GTBS10R 42-V-93280
0200 CHBS50R 42-C-93281
0075 GTBD05R 42-V-93282
42 XV 92625
XV132 0200 GTBS10R
42 FO 92625
(NOTE 9)
0200-GF-42L93528-BS20-0
FROM 1ST STAGE DISCHARGE COOLER
PH-ME-P-0160-001
2400-PV-23L91383-BD20-7C
(NOTE 5)
7C 7D N
BS20 BD20
0200x0150
0150 CBBD1FR 23-V-90377
TO 23-PDT-92551
PH-ME-P-0160-001
CONT. ON PH-ME-P-0160-001
23-XX-9105
SKID LIMITS
CCC ZI 92621
CCC PIC 92621
23 ZT 92621
23 PV 92621 (NOTE 13)
(NOTE 5)
(NOTE 8)
MW 2400
(NOTE 6)
2400x1800
0200 23 AE 92627-S1
ISOKINETIC SAMPLE VALVE
2400-PV-23L91392-BD20-7C
23-VG-9102
TRIM: 0200-PV-23L91599-BD20-4C
(NOTE 14)
23 LT 92623-01 RADAR
0075 CBBD1FR 23-V-93608
0200x0075
0200 CBBD1FR 23-V-90370
0200-PV-23L91628-BD20-0
4C 40 Y
0200-PV-23L91629-BD20-4C
0200 CBBD1FR 23-V-90371
0075 GTBDOOR 23-V-99641
0200x0075
0075 GTBDOOR 23-V-99477
F30
0200-PL-23L91399-BD20-4C
SURGE CONTROL AND RECYCLE FROM 2ND STAGE DISCHARGE COOLER
PH-ME-P-0170-002
1600-PV-23L91421-BD20-7C
7C 7D N
FROM 2ND STAGE COMPRESSOR SKID
PH-ME-P-0164-001
0200-PV-23L91607-BD20-0
WDM FIELD INSTALL WDB
T 729B
T 729A
23 TI 92624
0200
0400
(NOTE 12)
0200-PV-23L91621-BD20-0
0200 CBBD1FR 23-V-90372
(NOTE 6)
ISOKINETIC SAMPLE VALVE
23 AE 92627-S2
0200
0200-PV-23L91622-BD20-0
0200 CBBD1FR 23-V-90373
PDI 92622
0200 CBBD1FR 23-V-90374
23 PDT 92622
0200-PV-23L91623-BD20-0
0200-PV-23L91624-BD20-0
0200 CBBD1FR 23-V-90375
23 PT 92621
PI 92621
ATMOSPHERIC VENT HEADER
PH-ME-P-0267-001
AS20 BD20
0200-VA-31L92652-BD20-0
23 LT 92621 RADAR
0200-VA-31L92653-BD20-0
0200x0075
0075 CBBD1FR 23-V-90455
0075 CBBD1FR 23-V-90456
0200 CBBD1FR 23-V-90376
23 PT 92623
PI 92623
0200-PV-23L91625-BD20-0
0200 CBBD1FR 23-V-90377
0200-PV-23L91626-BD20-0
0200 CBBD1FR 23-V-90378
2400 MW
0200 CBBD1FR 23-V-90379
4 E Y MAG
23 LG 92623-02
23 LT 92623-02
4C 40 Y
L1oo2
PSD LI 92623 HH LL
LIC 92621 H L
0200 CBBD1FR 23-V-90380
0200-PV-23L91627-BD20-4C
23 FT 92621
23 FI 92621
0075 GTBDOOR 23-V-99471
0075 GTBDOOR 23-V-99472
23 ESDV 92621 (NOTE 11)
EV102 0400 BLBD6R
0075 GTBDOOR 23-V-97740
0200-PL-23L91468-BD20-4C
0400-PL-23L91398-BD20-4C
0400x0200
0200
CHB05OR 23-C-90381 (NOTE 4)
0400 BLBD4R 23-V-90382
0400 BLBD4R 23-V-90383
0400x0150
23 LV 92621A
0400 BLBD4R 23-V-90384
0400 BLBD4R 23-V-90385
0400-PL-11L90283-AD20-4C
TO 1ST STAGE/ MULTI-PURPOSE SEPARATORS
PH-ME-P-0126-002
0400 BLBD4R 23-V-90386
0400 BLBD4R 23-V-90387
0400x0150
23 LV 92621B
0400 BLBD4R 23-V-90388
0400 BLBD4R 23-V-90389
0075 GTBDOOR 23-V-99473
0075 GTBDOOR 23-V-99474
0075 GTBDOOR 23-V-99475
BD20 AD20
0200-PL-23L91469-BD20-4C
23 AE 92627-S3 ISOKINETIC SAMPLE VALVE
0200-PL-11L90079-AD20-4C
FIELD INSTALL
WDB WDM
T 730A
T 730B
TO TEG DEHYDRATION SYSTEM
PH-ME-P-0192-005
0400x0200
0200 CBBD1FR 23-V-90392
0200-PL-23L91400-BD20-4C
0400x0200 GTBD10R 23-V-90390
0200 GTBD10R 23-V-90391 (NOTE 7)
0200-DC-81L96509-BD20-0
0200-DC-81L96508-BD20-0
BD20 AD20
CLOSED DRAIN
PH-ME-P-0278-001
TO 2ND STAGE COMPRESSOR
PH-ME-P-0162-001
7C 7D N
(NOTE 5)
2400-PV-23L91393-BD20-7C
TO CCP-9102
PH-ME-P-0162-001

LIQUID LEVELS FROM BOTTOMHEAD SEAM (MM)	
LSHH-92623	950
LSH-92621	785
LIC-92621	615
LSL-92621	445
LSLL-92623	275

NOTES:
1. KEY INTERLOCKED VALVE.
2. LIQUID ULTRASONIC METER. PROVIDE STRAIGHT RUN OF 10D UPSTREAM AND 5D DOWNSTREAM.
3. KEY LOCKED VALVE.
4. ANTI-SLAM DESIGN.
5. DO NOT POCKET.
6. SPADE & SPACER TYPE. PROVIDE SPADE STAND AT EACH LOCATION TO PREVENT MISPLACING SPADE.
7. N2 AND STEAM INJECTION AT 2" DRAIN VALVE.
8. INTERNALS ILLUSTRATED ARE INCOMPLETE AND NOT TO SCALE. REFER TO VENDOR DWG.'S FOR COMPLETE INTERNAL INFORMATION.
9. MINIMUM 3 METER SEPARATION.
10. HEAVY WALL PIPE FOR NOISE ATTENUATION.
11. LOCATE ESDV AS CLOSE TO THE SCRUBBER AS PRACTICAL.
12. VESSEL SKIRT.
13. ACTUATOR TO HAVE TRAVEL STOP SET AT A POSITION EQUIVALENT TO CV=1000 (TO LIMIT CLOSURE).
14. 4C INSULATION IS NOT REQUIRED ON TRIM IN VAPOR SERVICE.

REV	DATE	BY	DESCRIPTION	CHK	ENGR	APPR	CLIENT
4	16OCT09	JDK	RE-ISSUED FOR CONSTRUCTION	RAK	RK/JL/PS	GMK	
3	22MAY09	JDK	RE-ISSUED FOR CONSTRUCTION	RAK	RK/JB/JL	GMK	
2	15OCT08	JDK	RE-ISSUED FOR CONSTRUCTION	RAK	RK/PS/JL	RAB	
1	09MAY08	JDK	RE-ISSUED FOR CONSTRUCTION	RAK	JC/PS/JL	SVS	
0	01OCT07	JDK	ISSUED FOR CONSTRUCTION	JTG	JC/ES/JB	SVS	

Field for file specification:
Field for date and time :

Wood Group Engineering (North Sea) Ltd.
MUSTANG INTERNATIONAL, LP
HOUSTON, TEXAS
PROJECT NO. 10910

bp

VALHALL
RE-DEVELOPMENT PROJECT
PIPING & INSTRUMENT DIAGRAM
2ND STAGE SUCTION SCRUBBER

REGISTRATION CODES			DRAWING NO.					SCALE
AREA	SYSTEM	TYPE	FACILITY CODE	ORIG.	DISP.	SEQ. No.	SHEET	NONE
T33-02	23	XB	PH	ME	P	0161	001	REV. 4

A1

MEI Project: 10910 – I:\10910\PID\WORKING P&ID FOLLOW-ON 2009\PH-ME-P-0162-001.DWG 15OCT09 1140 SF 1.00 JMP JKELLE

23-XX-9114
2ND STAGE COMPRESSOR SKID

23-KA-9102
2ND STAGE COMPRESSOR

CAPACITY: 4.9MM SM^3/D AT 25.1 DELTA BAR
DRIVER: 11,000 kW AT 9600 RPM

FROM 2ND STAGE SUCTION SCRUBBER PH-ME-P-0161-001

2400-PV-23L91393-BD20-7C

7C 70 N

(NOTE 10)

FIELD INSTALL

WDB WDM

704A 704B

1600-PV-23L91388-BD20-7C

0200-PV-23L91644-BD20-0 (NOTE 10)

7C 70 N

1600x1000

1000 BD20 DD20

1600x1000

6C 50 N

1000-PV-23L91452-DD20-6C

HP FLARE HEADER
PH-ME-P-0268-002

0400x0600 (FULL BORE) BLOCKED FLOW SET AT 70 BARG

PSV 92640

0075 GTD000J 23-V-99481

1200-VF-31L92468-AS23-0
1000-PV-23L91602-DD20-0

1000 BL003FL

1200-VF-31L92462-AS23-0
1000-PV-23L91603-DD20-0

0075 GTD000J 23-V-99482

0400x0600 (FULL BORE) BLOCKED FLOW SET AT 70 BARG

PSV 92641

0600x0400 1000x0600 DD20 AS23

HV 92640-03 (NOTE 15)

1200x1000 1200x1000

AS23 DD20 1000x0600 0600x0400

HV 92641-03 (NOTE 15)

0075 GTD000J 23-V-99480

0600 CB0024L

0075 GTD000J 23-V-99483

0600 CB0024L

HV 92640-01 (NOTE 15)

HV 92641-01 (NOTE 15)

0600-PV-23L91594-DD20-3D

0600-PV-23L91595-DD20-3D

6C 50 N

PH-S-1632 SP 54

1600 (NOTE 8)

1600-PV-23L91402-DD20-6C

TO 2ND STAGE DISCHARGE COOLER STRAINER PH-ME-P-0170-001

AIR VOL TANK

FVX 92642

FV 92642

FC 92642

FZSL 92642

FZSH 92642

FY 92642-03

IA

TT 92632

TI 92632

TT 92633

TI 92633

TT 92636

TI 92636

DD20 BD20

CBDD10J 23-V-90470

PDT 92630

PDI 92630

CBDD10J 23-V-90394

PDT 92634

PDI 92634

(NOTE 4) PH-S-1328 CONE STRAINER SP 155

(NOTE 16)

CBDD10J 23-V-90473

CBDD10J 23-V-90395

TT 92637

TI 92637

TT 92638

TI 92638

FT 92633-02

FI 92633-02

(NOTE 3) FE 92633

FT 92633-01

FI 92633-01

F102 (NOTE 13)

PT 92640

PI 92640

(NOTE 14)

CBBD1FR 23-V-99479

PT 92632

PI 92632

CBDD10J 23-V-90396

PT 92637

PI 92637

PT 92635

PI 92635

CBDD10J 23-V-90397

PT 92636

PI 92636

PT 92631

PI 92631

CBDD10J 23-V-90398

PT 92639

PI 92639

CBDD10J 23-V-90401

CBDD10J 23-V-90400

(NOTE 9)

1600-PV-23L91402-DD20-6C

0200-DO-81L96554-AS20-0 1:100

HAZARDOUS OPEN DRAIN
PH-ME-P-0280-007

(0200) (NOTE 5)

2400x2000

(NOTE 2)

BD20

(NOTE 2)

PH-S-2303 SP 383 NOISE SUPPRESSION ARRAY

(NOTE 6)

TP3A

TP1

DD20

TP2

TP3B

0200-DO-81L96498-AS20-0 1:100

HAZARDOUS OPEN DRAIN
PH-ME-P-0280-007

23-XX-9114
SKID LIMITS
(NOTE 6)

(NOTE 12) (NOTE 11)

E PMS P

CCP KA 9102

FROM PI-92621 FOR START-UP SUCT. THROTTLING
PH-ME-P-0161-001

PY 92621-01

CCP-9102 COMPRESSOR PANEL

M07

23-KA-9102 (M) 23-KA-9102

NOTES:

1. DELETED.
2. REMOVABLE MAINTENANCE SPOOL.
3. CONDITIONING PLATE. PROVIDE STRAIGHT RUN OF 2D UPSTREAM AND 2D DOWNSTREAM.
4. LOCATE STRAINER AS CLOSE AS POSSIBLE TO COMPRESSOR SUCTION FLANGE.
5. BOROSCOPE CONNECTION MINIMUM DISTANCE FROM COMPRESSOR.
6. ALL ITEMS IN SKID BOUNDRY SUPPLY BY SKID VENDOR
7. LUBE OIL, SEAL GAS & VIB. TEMPT. DETAILS ON P&ID'S (PH-ME-P-0163, 0164, & 0165)
8. ANTI-SLAM AXIAL FLOW DESIGN.
9. SUCTION & DISCHARGE PIPING TO HAVE MIN. OF 3 PIPE DIA. STRAIGHT RUN.
10. DO NOT POCKET.
11. SHUTDOWN WITH BLOWDOWN (PH-PSD3-23-02B). SHUTDOWN WITHOUT BLOWDOWN (PH-PSD3-23-02).
12. INTERNODE (30-NX1-92XX2)..
13. TWO 0050 SIZE FLANGED GATE VALVE, GTDD00J, FOR EACH OF; 23-FT-92633-01 AND 23-FT-92633-02 (TOTAL 4 VALVES) – BY PIPING. SEE DETAIL F102 ON P&ID PH-ME-P-0102-001.
14. 23-PT-92640 IS USED TO CALCULATE SUCTION/SEAL PRESSURE DIFFERENTIAL PER MT'S C&E.
15. KEY INTERLOCKED VALVE.
16. MAINTENANCE DROP OUT SPOOL.

NOTES:

REV	DATE	BY	DESCRIPTION	CHK	ENGR	APPR	CLIENT
4	16OCT09	JS	RE-ISSUED FOR CONSTRUCTION	RAK	RK/JL/PS	GMK	
3	22MAY09	JDK	RE-ISSUED FOR CONSTRUCTION	RAK	RK/JB/JL	GMK	
2	15OCT08	JDK	RE-ISSUED FOR CONSTRUCTION	RAK	RK/PS/JL	RAB	
1	16MAY08	JDK	RE-ISSUED FOR CONSTRUCTION	RAK	JC/PS/JL	SVS	
0	010CT07	JDK	ISSUED FOR CONSTRUCTION	JTG	JC/ES/JB	SVS	

Wood Group Engineering (North Sea) Ltd.

MUSTANG INTERNATIONAL, LP
HOUSTON, TEXAS

PROJECT NO. 10910

bp

VALHALL
RE-DEVELOPMENT PROJECT
PIPING & INSTRUMENT DIAGRAM
2ND STAGE COMPRESSOR

REGISTRATION CODES			DRAWING NO.					SCALE
AREA	SYSTEM	TYPE	FACILITY CODE	ORIG.	DISP.	SEQ. No.	SHEET	NONE
T43-02	23	XB	PH	ME	P	0162	001	REV. 4

Field for file specification:
Field for date and time :

A1

MEI Project: 10910 - I:\10910\PID\WORKING P&ID FOLLOW-ON 2009\PH-ME-P-0170-001.DWG 15OCT09 1123 SF 25.4G IMP JIKELLE

23-XX-9144
2ND STAGE DISCHARGE COOLER/
GAS DEHYDRATION PRECOOLER SKID

FROM 2nd STAGE COMPRESSOR
PH-ME-P-0162-001
1600-PV-23L91402-DD20-6C

PH-S-1922 SP 280 T-STRAINER (NOTE 1)
0200-DC-81L96515-DD20-3D
0200 GTD010J 23-I-99404
0075 GTD000J 23-V-99492
0200 GBD010J 23-I-99405
AD20 DD20
CLOSED DRAIN
PH-ME-P-0278-001

0150 GBD010J 23-I-99402
0150 GBD010J 23-I-99403

PDI 92716 H
23 PDT 92716

6C 50 N
0150
TI 92702
23 TT 92702

0200-PV-23L91403-DD20-3D (NOTE 4)
3D 0
0075 GTD000J 23-I-99403 (NOTE 6)
YSV131 0200
PSD CCP E
23 YSV 92645
23 FO 92645
23 (NOTE 5) HV 92645
DD20 AS23
0300 BLD03FL
0300x0200
0300-VF-31L92654-AS23-0 (NOTE 4)
HP FLARE HEADER
PH-ME-P-0268-002

T 706B T 706A
WDM FIELD INSTALL WDB
1600-PV-23L91418-DD20-6C (NOTE 4)
TO 2ND STAGE DISCHARGE COOLER
PH-ME-P-0170-002

23-XX-9144
SKID LIMITS

CONT. ON DWG. PH-ME-P-0129-002

FROM TT-92704
PH-ME-P-0170-002

FT 92706 H
45 FT 92706 (NOTE 2)
FE 92706 (NOTE 7)
F101

TIC 92704 H
45 TV 92704

COOLING MEDIUM SUPPLY
PH-ME-P-0265-001
0600-WC-45L94391-AS20-0

0600 BUAS20R 45-V-91195
0600 BUAS20R 45-V-91196
0600x0400
0400 (NOTE 3)
0600x0400
0600 BUAS20R 45-V-91197
0075 GTA500R 45-I-99270
0075 GTA500R 45-I-99271
0075 GTA500R 45-I-99301
4C 30 N
0300 GBAS10R 45-V-91198

PDI 92714 H
45 PDT 92714

0150 GBAS10R 45-V-91199
PH-S-1930 SP 259 T-STRAINER (NOTE 1)
0150 GBAS10R 45-V-91200
0200 GTA500R 45-I-97088
0200 GBA010R 45-I-91302
0200 GBA010R

0200-DO-81L94850-AS20-0
0200-DO-81L96513-AS20-0
HAZARDOUS OPEN DRAIN
PH-ME-P-0280-002

45 TT 92706
0150
TT 92706
0600-WC-45L94458-AS20-0
TO 2ND STAGE DISCHARGE COOLER
PH-ME-P-0170-002

PDT MEASUREMENT ACROSS 2ND STG. DISCHARGE COOLER
PH-ME-P-0170-002

0200-DO-81L96517-AS20-0
FROM 2ND STAGE DISCHARGE COOLER
PH-ME-P-0170-002

CONT. ON DWG. PH-ME-P-0170-002

NOTES:
1. T-STRAINERS ARE BUTT WELD.
2. CONDITIONING PLATE. PROVIDE STRAIGHT RUN OF 2 PIPE DIAMETERS UPSTREAM AND 2 PIPE DIAMETERS DOWNSTREAM.
3. VALVE EQUIPPED WITH MINIMUM 10% FLOW MECHANICAL STOP TO PROTECT AGAINST THERMAL SHOCK.
4. DO NOT POCKET.
5. KEY LOCKED VALVE.
6. MINIMUM 1 METER SEPARATION.
7. TWO 0050 SIZE FLANGED GATE VALVES, GTA500R, FOR EACH OF: 45-FT-92706 (TOTAL 2 VALVES) - BY PIPING. SEE DETAIL F101 ON P&ID PH-ME-P-0102-001.

Field for file specification:
Field for date and time :

REV	DATE	BY	DESCRIPTION	CHK	ENGR	APPR	CLIENT
4	16OCT09	JDK	RE-ISSUED FOR CONSTRUCTION	RAK	RK/JL/PS	GMK	
3	22MAY09	JDK	RE-ISSUED FOR CONSTRUCTION	RAK	RK/JB/JL	GMK	
2	15OCT08	JDK	RE-ISSUED FOR CONSTRUCTION	RAK	RK/PS/JL	RAB	
1	09MAY08	JDK	RE-ISSUED FOR CONSTRUCTION	RAK	JC/PS/JL	SVS	
0	01OCT07	JDK	ISSUED FOR CONSTRUCTION	JTG	JC/ES/JB	SVS	

Wood Group Engineering (North Sea) Ltd.
MUSTANG INTERNATIONAL, LP
HOUSTON, TEXAS
PROJECT NO. 10910

bp

VALHALL
RE-DEVELOPMENT PROJECT
PIPING & INSTRUMENT DIAGRAM
2ND STAGE DISCHARGE COOLER STRAINERS

REGISTRATION CODES			DRAWING NO.					SCALE
AREA	SYSTEM	TYPE	FACILITY CODE	ORIG.	DISP.	SEQ. No.	SHEET	NONE
T33-02	23	XB	PH	ME	P	0170	001	REV. 4

A1

MEI Project: 10910 - I:\10910\PID\WORKING P&ID FOLLOW-ON 2009\PH-ME-P-0170-002.DWG 150CT09 1121 SF 25.40 IMP JIKELLE

23-XX-9144
2nd STAGE DISCHARGE COOLER/
GAS DEHYDRATION PRECOOLER SKID

23-HX-9103 A/B/C/D
2nd STAGE DISCHARGE COOLERS
DUTY: 13430 kW
TYPE: PCHE
DESIGN: (PROCESS) 70 BARG / FULL VAC. AT 175 °C MIN. -30 °C
OPERATING: 37.0 BARG AT 106/31°C
DESIGN: (UTILITY) 70 BARG / FULL VAC AT 175 °C MIN. -30 °C
OPERATING: 6.0 BARG AT 20/92.5°C
MATERIAL: 22Cr DUPLEX

23-XX-9144
SKID LIMITS

FROM 23-KA-9102
2ND STAGE COMPRESSOR
PH-ME-P-0170-001

1600-PV-23L91418-DD20-6C
(NOTE 4)

0800-PV-23L91406-DD20-6C

0800-PV-23L91407-DD20-6C

0800-PV-23L91408-DD20-6C

0800-PV-23L91409-DD20-6C

1600-PV-23L91418-DD20-6C

1600-PV-23L91419-DD20-0

1600-PV-23L91414-DD20-0

0800-PV-23L91410-DD20-0

0800-PV-23L91411-DD20-0

0800-PV-23L91412-DD20-0

0800-PV-23L91413-DD20-0

0300-WC-45L94471-AD20-1C

0300-WC-45L94464-AD20-1C

0300-WC-45L94465-AD20-1C

0300-WC-45L94472-AS20-0

0300-WC-45L94460-AS20-0

0300-WC-45L94461-AS20-0

0300-WC-45L94462-AS20-0

0600-WC-45L94459-AS20-0

0600-WC-45L94466-AD20-1C

0600-WC-45L94467-AD20-1C

0600-WC-45L94469-AD20-1C

0600-WC-45L94458-AS20-0

0600-PV-24L91792-BD20-0

0600-PL-24L91777-BD20-0

0800-PV-23L91463-BD22-0

0200-DC-81L96524-DD20-0

1600-PV-23L91420-DD20-0
(NOTE 4)

0200-WC-45L94468-AD20-1C

0200-WC-45L94470-AD20-1C

0200-DO-81L96517-AS20-0

0075-DO-81L96518-AS20-0

0075-DO-81L96519-AS20-0

0075-DO-81L96521-AS20-0

0050-CA-43L93732-GR25-0

0050-CA-43L93710-GR25-0

FROM HP METHANOL
PH-ME-P-0298-016

OFF-SPEC RECYCLE FROM
TEG CONTACTOR OUTLET
PH-ME-P-0192-001

SURGE CONTROL AND RECYCLE
TO 2ND STAGE SUCTION SCRUBBER
PH-ME-P-0161-001

1600-PV-23L91421-BD20-7C

1600-PV-23L91416-BD20-7C

FROM
PH-ME-P-0191-001

FROM NGL STABILIZER
PH-ME-P-0226-001

2ND STAGE DISCHARGE
COOLER DRAINAGE
PH-ME-P-0170-003

TO GAS DEHYDRATION PRECOOLER
PH-ME-P-0170-003

CONTINUED ON PH-ME-P-0170-001

CONTINUED ON PH-ME-P-0170-003

TO 45-PDT-92706
PH-ME-P-0170-001

COOLING MEDIUM SUPPLY
PH-ME-P-0170-001

HOT COOLING
MEDIUM RETURN
PH-ME-P-0265-001

TO COOLING MEDIUM
RETURN HEADER
PH-ME-P-0265-001

TO TIC-92704
PH-ME-P-0170-001

TO HAZ. OPEN DRAIN
PH-ME-P-0170-001

23-HX-9103A

23-HX-9103B

23-HX-9103C

23-HX-9103D

SEE DETAIL 1

DETAIL 1

UTILITY INLET SIDE

PROCESS SIDE (TYP.)

AS20

DD20

AD20

LOW POINT

RECYCLE/
ANTI-SURGE VALVE

AIR VOL. TANK

INJECTION
QUILL
ASSEMBLY

1D2
THERMAL
SET AT
14 BARG

PSV
92716

HV
92712

HV
92710-03
(NOTE 1)

HV
92710-02
(NOTE 1)

HV
92710-01
(NOTE 1)

HV
92651

ESDV
92651A

ESDV
92651B

PDT
92651

PDT
92706

PDT
92702

PDI
92706

PDI
92651

TT
92707A

TT
92707B

TT
92707C

TT
92707D

TT
92703A

TT
92703B

TT
92703C

TT
92703D

TT
92704

TT
92708

TI
92703A

TI
92703B

TI
92703C

TI
92703D

TI
92707A

TI
92707B

TI
92707C

TI
92707D

TI
92708

ZT
92643

ZI
92643

FIC
92643

FV
92643

FVX
92643

FZSH
92643

FZSL
92643

AE
92643

PSV
92716

SP
53
PH-S-1633

SP
72
PH-S-1950

0075
GTADOOR
45-V-93912

0075
GTASOOR
81-V-93390
(NOTE 5)

0075
GTADOOR
45-V-93914

0075
GTADOOR
45-V-91273

0200
GBD010J
23-V-90407

0150
GBD010J
23-V-90409

0150
GBD010J
23-V-90410

0200
GTADOOR
45-V-91272

0200
GTADIOR

0600
BUA020R
(NOTE 8)

0200
BUD020L

0200
BUD070L

0200
BUD070L

0200
BUD070

23-XX-9144
2ND STAGE DISCHARGE COOLER/
GAS DEHYDRATION PRECOOLER SKID

23-XX-9144
SKID LIMITS

CONT. ON DWG. PH-ME-P-0170-002

CONT. ON DWG. PH-ME-P-0170-004

FROM 23-TT-92786
PH-ME-P-0170-004

FROM 2nd STAGE DISCHARGE COOLERS
PH-ME-P-0170-002
1600-PV-23L91420-DD20-0

FROM 2nd STAGE DISCHARGE COOLERS
PH-ME-P-0170-002
0200-DC-81L96254-DD20-0

(NOTE 4)

TO GAS DEHYDRATION PRECOOLER
PH-ME-P-0170-004
1600-PV-23L91420-DD20-0

PH-S-1924
T-STRAINER
(NOTE 1)
SP
280

PDI 92782 H
PDT 92782 23

0150 GBDT01J 23-FT-90411

0150 GBDT01J 23-FT-90413

0200 GTDD01J 81-V-93302

0075 GTDD00J 81-V-93392

0200 GBDD00J 81-V-93301

PDI 92781 H
PDT 92781 45

0200-DC-81L96524-DD20-0

TIC 92786 H

F1 92781 H
FT 92781 45 (NOTE 5)
FE 92781 45 (NOTE 2)
F101

(NOTE 3)
TV 92786 23

COOLING MEDIUM SUPPLY
PH-ME-P-0265-001
0800-WC-45L94389-AS20-0

0800 BUAS20R 45-V-91201

0800 BUAS20R 45-V-91202

0075 GTAS00R 45-V-91274

0800x0600

0600

0800x0600

0072 GTAS00R 45-V-91275

0800 BUAS20R 45-V-91203

0075 GTAS00R 45-V-93915

4C 30 N

0300 GBAS10R 45-V-91204

0150 GBAS10R 45-V-91205

PH-S-1925
T-STRAINER
(NOTE 1)
SP
260

0150 GBAS10R 45-V-91206

0200 GTAS10R 81-V-93300

0200-DD-81L96522-AS20-0

TO DEHYDRATION PRECOOLER
PH-ME-P-0170-004
0800-WC-45L94473-AS20-0

FROM GAS DEHYDRATION PRECOOLER
PH-ME-P-0170-004
0200-DC-81L96526-DD20-0

0200-DD-81L96523-AS20-0
HAZARDOUS OPEN DRAIN
PH-ME-P-0280-002

0200-DC-81L96525-DD20-0
DD20 AD20
CLOSED DRAIN
PH-ME-P-0278-001

NOTES:
1. T-STRAINERS ARE BUTT WELDED.
2. CONDITIONING PLATE. PROVIDE STRAIGHT RUN OF 2 PIPE DIAMETERS UPSTREAM AND 2 PIPE DIAMETERS DOWNSTREAM.
3. VALVE EQUIPPED WITH MINIMUM 10% FLOW MECHANICAL STOP TO PROTECT AGAINST THERMAL SHOCK.
4. DO NOT POCKET.
5. TWO 0050 SIZE FLANGED GATE VALVES, GTAS00R, FOR EACH OF: 45-FE-92781 (TOTAL: 2 VALVES) - BY PIPING. SEE F101 ON P&ID PH-ME-P-0102-101.

REV	DATE	BY	DESCRIPTION	CHK	ENGR	APPR	CLIENT
4	16OCT09	JDK	RE-ISSUED FOR CONSTRUCTION	RAK	RK/JL/PS	GMK	
3	22MAY09	JDK	RE-ISSUED FOR CONSTRUCTION	RAK	RK/JB/JL	GMK	
2	15OCT08	JDK	RE-ISSUED FOR CONSTRUCTION	RAK	RK/PS/JL	RAB	
1	09MAY08	JDK	RE-ISSUED FOR CONSTRUCTION	RAK	JC/PS/JL	SVS	
0	01OCT07	JDK	ISSUED FOR CONSTRUCTION	JTG	JC/ES/JB	SVS	

Wood Group Engineering (North Sea) Ltd.

MUSTANG INTERNATIONAL, LP
HOUSTON, TEXAS

PROJECT NO. 10910

bp

VALHALL
RE-DEVELOPMENT PROJECT
PIPING & INSTRUMENT DIAGRAM
GAS DEHYDRATION PRECOOLER STRAINERS

REGISTRATION CODES			DRAWING NO.					SCALE
AREA	SYSTEM	TYPE	FACILITY CODE	ORIG.	DISP.	SEQ. No.	SHEET	NONE
T33-02	23	XB	PH	ME	P	0170	003	REV. 4

Field for file specification:
Field for date and time :

A1

MEI Project: 10910 - I:\10910\PID\WORKING P&ID FOLLOW-ON 2009\PH-ME-P-0171-001.DWG 15OCT09 1437 SF 25.4G IMP JIKELLE

23-VG-9103
3rd STAGE SUCTION SCRUBBER
SIZE: 2.902M O.D. x 5.0M T/T
DESIGN: 70 BARG AT 135°C/-65°C
OPERATING: 35 BARG AT 19.3° C
MATERIAL: 316SS

23-FE-9121
MOTIVE GAS HEATER
DUTY: 49.1 KW
DESIGN: 70 BARG AT 135°C/-46°C
OPERATING: 35 BARG AT 17.2°C/31.0°C

LT FLARE HEADER
PH-ME-P-0272-001
1000-VF-31L92660-AS23-0 (NOTE 3)
0400-VF-31L92661-AS23-0
0300-VF-31L92606-AS23-0 (NOTE 3)
0300-PV-23L91617-DS20-0
1.5#3 FIRE SET AT 70 BARG
PSV 92727
PSV 92728
HV 92727-03 (NOTE 1)
HV 92728-03 (NOTE 1)
0300-VF-31L92605-AS23-0
0300-PV-23L91616-DS20-0
0200-PV-23L91592-DS20-0
0200-PV-23L91593-DS20-0
HV 92727-01 (NOTE 1)
HV 92728-01 (NOTE 1)
PSD
CCP
E
FO 92729
YSV 92729
HV 92729 (NOTE 9)
0800-PV-23L91429-DS20-0
BUY BACK GAS
PH-ME-P-0317-001
0200-GF-42L93512-DD20-0
TO TEG DEHYDRATION
PH-ME-P-0192-002
0200-GF-42L93547-DD20-0
(FROM COLD SEPARATOR BOTTOMS) FROM GAS-GAS INTERCHANGER OUTLET HEADER
PH-ME-P-0195-005
1200-PV-25L92010-DS20-0
FROM SURGE CONTROL/RECYCLE 3RD STAGE COMPRESSOR
PH-ME-P-0180-001
1600-PV-23L91426-DS20-0
1600-PV-24L91751-DS20-0
FROM TEG CONTACTOR
PH-ME-P-0192-001
FROM 3RD STAGE COMPRESSOR
PH-ME-P-0174-001
0200-PV-23L91609-DS20-0
0200-GF-42L93525-DS20-0
XV 92725
FO 92725
ZT 92831A
ZI 92831A
PIC 92831A
PV 92831A (NOTE 12)
2400-PV-24L91759-DS20-6C
ISOKINETIC SAMPLE VALVE
AE 92727-S1
LT 92723-02 DP CELL
TI 92724
23-V-90494
23-V-90495
23-V-90496
23-V-90497
23-V-90498
23-V-90499
23-V-90417
23-V-90418
23-V-90419
23-V-90420
23-V-90422
23-V-90423
23-V-90424
23-V-90425
23-V-90426
23-V-90427
23-V-90428
23-V-90429
23-V-90430
23-V-90431
23-V-90432
23-V-93209
42-C-93210
42-V-99509
TRIM: 0200-PV-23L91606-DS20-0
0200-PL-23L91432-DS20-0
0200-PL-23L91431-DS20-0
0200-DC-81L96529-DS20-0
LT CLOSED DRAIN
PH-ME-P-0278-004
PDI 92722
PDT 92722
PT 92723-01
PT 92721
PI 92721
PI 92723
LT 92723-01 RADAR
LG 92722-01 REFLEX
LG 92722-02 REFLEX
LI 92723 HH LL
LIC 92721 H L
TIC 92721 H L
FT 92729
FI 92729
XV 92721
XV102 0600 BLDS20L (NOTE 10)
0200-PV-23L91611-DD20-0
0200-VF-31L92664-AS23-0
0200-PV-23L91612-DD20-0
1D2 INTERNAL HEAT SET AT 70 BARG
PSV 92730
PSV 92731
HV 92730-03 (NOTE 1)
HV 92731-03 (NOTE 1)
HV 92730-02 (NOTE 1)
HV 92731-02 (NOTE 1)
HV 92730-01 (NOTE 1)
HV 92731-01 (NOTE 1)
23-V-99510
23-V-99511
23-V-99512
23-V-99513
23-V-99514
23-V-99515
0100-PV-23L91605-DD20-0
0100-PV-23L91604-DD20-0
7C 70 N
2000-PV-23L91430-DD20-7C
TO 3rd STAGE COMPRESSOR
PH-ME-P-0172-001
0600-PV-23L91355-DD20-0
FIELD INSTALL
ELEMENT T/C
TE 92722-03 (V)
TE 92722-01
TE 92722-02
TT 92722-03
TT 92722-01
TT 92722-02
TT 92721
TT 92722
23-V-93667
23-V-93674
23-V-93675
ATMOSPHERIC VENT HEADER
PH-ME-P-0267-001
0200-VA-31L92662-DS20-0
0200-VA-31L92659-DS20-0
0400-PV-23L91643-DD20-0
0600-PV-23L91440-DD20-0
0200-PV-23L91441-DD20-0
0200-PV-23L91442-DD20-0
0400-PV-23L91354-DD20-8C
0200-PV-23L91443-DD20-0
TO HP/LT FLARE GAS EJECTOR
PH-ME-P-0276-001
TO LP FLARE GAS EJECTOR
PH-ME-P-0276-002
TO 2nd STAGE SEPARATOR GAS EJECTOR
PH-ME-P-0150-001
TO TEG DEHYDRATION
PH-ME-P-0192-002
0050-CA-43L93731-GR25-0
HP MEOH
PH-ME-P-0298-016
0600-PL-13L90614-BD22-0
0600-PL-13L90639-BD22-0
TO NGL STABILIZER
PH-ME-P-0226-001
ISOKINETIC SAMPLE VALVE
AE 92727-S3
AE 92721-C
23-C-90433
LV 92721A
LV 92721B
T707A
T707B
T709A
T709B
T710A
T710B
T711A
T711B
T712A
T712B
T713A
T713B
T715A
T715B
T1003

LIQUID LEVELS FROM BOTTOM HEAD TANGENT LINE (mms)	
LSHH-92723	2000
LSH-92721	1675
LIC-92721	1350
LSL-92721	900
LSLL-92723	525

NOTES:
1. KEY INTERLOCKED VALVE.
2. LIQUID ULTRASONIC METER. PROVIDE STRAIGHT RUN OF 7 PIPE DIAMETERS UPSTREAM AND 3 PIPE DIAMETERS DOWNSTREAM.
3. DO NOT POCKET.
4. SPADE & SPACER TYPE. PROVIDE SPADE STAND AT EACH LOCATION TO PREVENT MISPLACING SPADE.
5. ANTISLAM DESIGN.
6. N2 INJECTION AT 2" DRAIN VALVE.
7. INTERNALS ILLUSTRATED ARE INCOMPLETE AND NOT TO SCALE. REFER TO VENDOR DWG.'S FOR COMPLETE DETAILS AND ACCURATE INTERNAL INFORMATION.
8. VESSEL SKIRT.
9. KEY LOCKED VALVE.
10. LOCATE THE XV AS NEAR THE SCRUBBER AS PRACTICLE.
11. 1oo2 VOTING ONLY ON LSHH USING 23-LT-92723-01/02. 1oo1 VOTING ON LSLL USING LEVEL TRANSMITTER 23-LT-92723-01.
12. ACTUATOR TO HAVE TRAVEL STOP SET AT A POSITION EQUIVALENT TO CV=510 (TO LIMIT CLOSURE).

REV	DATE	BY	DESCRIPTION	CHK	ENGR	APPR	CLIENT
4	16OCT09	JDK	RE-ISSUED FOR CONSTRUCTION	RAK	RK/JL/PS	GMK	
3	22MAY09	JDK	RE-ISSUED FOR CONSTRUCTION	RAK	RK/JB/JL	GMK	
2	03DEC08	CDB	RE-ISSUED FOR CONSTRUCTION	RM	RK/PS/JL	DR	
1	09MAY08	JDK	RE-ISSUED FOR CONSTRUCTION	RAK	JC/PS/JL	SVS	
0	01OCT07	JDK	ISSUED FOR CONSTRUCTION	JTG	JC/ES/JB	SVS	

Field for file specification:
Field for date and time :

Wood Group Engineering (North Sea) Ltd.
MUSTANG INTERNATIONAL, LP
HOUSTON, TEXAS
PROJECT NO. 10910

bp

VALHALL
RE-DEVELOPMENT PROJECT
PIPING & INSTRUMENT DIAGRAM
3RD STAGE SUCTION SCRUBBER

REGISTRATION CODES			DRAWING NO.					SCALE
AREA	SYSTEM	TYPE	FACILITY CODE	ORIG.	DISP.	SEQ. No.	SHEET	NONE
T33-02	23	XB	PH	ME	P	0171	001	REV. 4

A1

23-XX-9115
3RD STAGE COMPRESSOR SKID

23-KA-9103
3RD STAGE COMPRESSOR
CAPACITY: 7.9MM SM3/D AT 37.7 DELTA BAR
DRIVER: 11,000 kW AT 9000 RPM

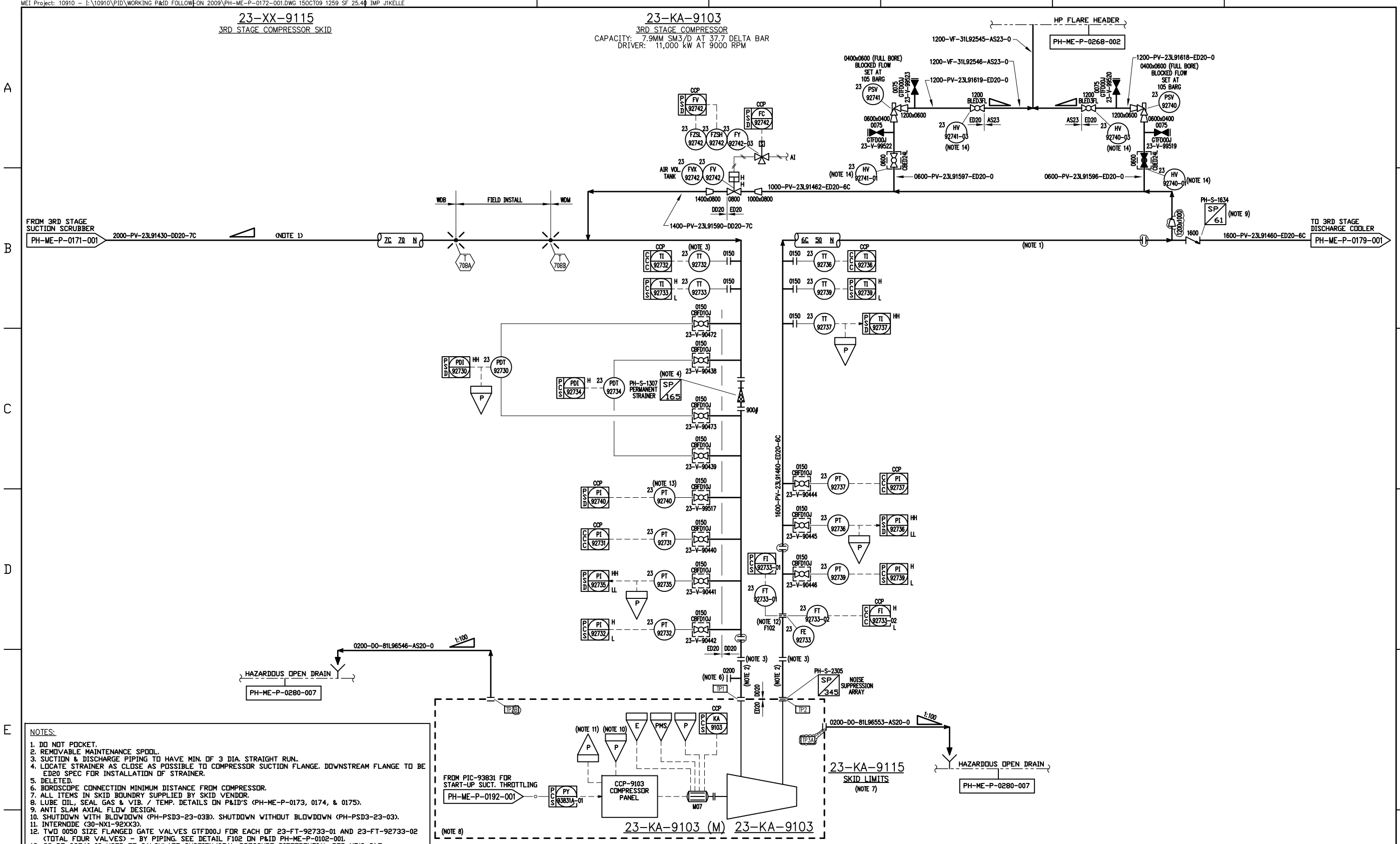

NOTES:

1. DO NOT POCKET.
2. REMOVABLE MAINTENANCE SPOOL.
3. SUCTION & DISCHARGE PIPING TO HAVE MIN. OF 3 DIA. STRAIGHT RUN..
4. LOCATE STRAINER AS CLOSE AS POSSIBLE TO COMPRESSOR SUCTION FLANGE. DOWNSTREAM FLANGE TO BE ED20 SPEC FOR INSTALLATION OF STRAINER.
5. DELETED.
6. BOROSCOPE CONNECTION MINIMUM DISTANCE FROM COMPRESSOR.
7. ALL ITEMS IN SKID BOUNDRY SUPPLIED BY SKID VENDOR.
8. LUBE OIL, SEAL GAS & VIB. / TEMP. DETAILS ON P&ID'S (PH-ME-P-0173, 0174, & 0175).
9. ANTI SLAM AXIAL FLOW DESIGN.
10. SHUTDOWN WITH BLOWDOWN (PH-PSD3-23-03B). SHUTDOWN WITHOUT BLOWDOWN (PH-PSD3-23-03).
11. INTERNODE (30-NX1-92XX3).
12. TWO 0050 SIZE FLANGED GATE VALVES GTFD00J FOR EACH OF 23-FT-92733-01 AND 23-FT-92733-02 (TOTAL FOUR VALVES) - BY PIPING. SEE DETAIL F102 ON P&ID PH-ME-P-0102-001.
13. 23-PT-92740 IS USED TO CALCULATE SUCTION/SEAL PRESSURE DIFFERENTIAL PER MT'S C&E.
14. KEY INTERLOCKED VALVES.

NOTES:

REV	DATE	BY	DESCRIPTION	CHK	ENGR	APPR	CLIENT
4	16OCT09	JDK	RE-ISSUED FOR CONSTRUCTOIN	RAK	RK/JL/PS	GMK	
3	22MAY09	JDK	RE-ISSUED FOR CONSTRUCTION	RAK	RK/JB/JL	GMK	
2	30OCT08	JDK	RE-ISSUED FOR CONSTRUCTION	RAK	RK/JL/PS	SVS	
1	09MAY08	JDK	RE-ISSUED FOR CONSTRUCTION	RAK	JC/PS/JL	SVS	
0	01OCT07	JDK	ISSUED FOR CONSTRUCTION	JTG	JC/ES/JB	SVS	

Wood Group Engineering (North Sea) Ltd.

MUSTANG INTERNATIONAL, LP
HOUSTON, TEXAS

PROJECT NO. 10910

bp

VALHALL
RE-DEVELOPMENT PROJECT
PIPING & INSTRUMENT DIAGRAM
3RD STAGE COMPRESSOR

REGISTRATION CODES			DRAWING NO.						SCALE
AREA	SYSTEM	TYPE	FACILITY CODE	ORIG.	DISP.	SEQ. No.	SHEET		NONE
T44-02	23	XB	PH	ME	P	0172	001	REV. 4	

Field for file specification:
Field for date and time :

A1

MEI Project: 10910 - I:\10910\PID\WORKING P&ID FOLLOW-ON 2009\PH-ME-P-0180-001.DWG 12OCT09 1611 SF 25.4G IMP JIKELLE

24-XX-9116
3RD STAGE DISCHARGE COOLER SKID

24-HX-9104
3rd STAGE DISCHARGE COOLER
DUTY: 15930 KW
TYPE: PCHE
DESIGN: 105 BARG AT 150°C/-30°C BOTH SIDES
OPERATING : (PROCESS) 71 BARG AT 72°C
OPERATING : (COOLING MEDIUM) 3.5 BARG AT 20°C
MATERIAL: 22Cr DUPLEX

24-XX-9116
SKID LIMITS

FROM 3RD STAGE COMPRESSOR PH-ME-P-0179-001
1600-PV-24L91752-ED20-6C
TO TV-92774 PH-ME-P-0179-001
FROM COOLING MEDIUM STRAINER PH-ME-P-0179-001
0800-WC-45L94481-AS20-0
FROM GAS STRAINER PH-ME-P-0179-001
0200-DC-81L96536-ED20-0
TO HAZ. OPEN DRAIN PH-ME-P-0179-001
0200-DO-81L96539-AS20-0
CONT. ON DWG. PH-ME-P-0179-001

0300-PV-24L91754-ES20-0
0300-PV-24L91753-ED20-3D
0400x0300
0400-VF-31L92667-AS23-0
TO LT FLARE HEADER PH-ME-P-0180-003
CONT. ON DWG. PH-ME-P-0180-003
LOW POINT
HIGH POINT ATMOSPHERIC VENT
INJECTION QUILL ASSEMBLY
1600x1400
1400-PV-24L91755-ED20-0
1400-PV-24L91757-ED20-0
0200-WC-45L94520-AD20-1C
0100-WC-45L94485-AD20-1C
0800-WC-45L94484-AD20-0
TO COOLING MEDIUM RETURN PH-ME-P-0265-001
0800-WC-45L94486-AD20-0
1600-PV-23L91426-DS20-6C
1600-PV-23L91425-DS20-6C
TO 3RD STAGE SUCTION SCRUBBER PH-ME-P-0171-001
AIR VOL. TANK
1400x1200
1600x1200
0200-GF-42L93529-ED20-0
0200-GF-42L93507-ED20-0
FROM BUY BACK GAS PH-ME-P-0317-001
0200-GF-42L93538-ES20-0
1400-PV-24L91756-ES20-0
TO GAS/GAS INTERCHANGER PH-ME-P-0180-003
CONT. ON DWG. PH-ME-P-0180-003
0300-PV-24L91801-ES20-0
0200-DC-81L96537-ED20-0
0200-DC-81L96535-ED20-0
LT CLOSED DRAIN PH-ME-P-0278-004
0400-DO-81L96560-AS20-0
HAZ. OPEN DRAIN PH-ME-P-0280-007
0200-DC-81L96532-ED20-0
LT CLOSED DRAIN PH-ME-P-0278-004
0800-DO-81L96562-AS20-0
HAZ. OPEN DRAIN PH-ME-P-0280-007

Field for file specification:
Field for date and time :

NOTES:
1. DO NOT POCKET.
2. COOLING MEDIUM DRAINS TO BE LOCATED EITHER ON PIPE OR EQUIPMENT AND SHALL BE AT LOW POINT.
3. MAINTENANCE DROP OUT SPOOL.
4. LOCATE VALVE AS CLOSE AS PRACTICAL TO TEE. PROVIDE APPROX. 1 METER OF DOWNSTREAM STRAIGHT RUN.
5. KEY INTERLOCKED VALVE.
6. MINIMIZE DISTANCE BETWEEN ESDV AND UPSTREAM CHECK VALVE.
7. ANTI-SLAM DESIGN.
8. DISSIMULAR CHECK VALVE.
9. DELETED.
10. KEY LOCKED VALVE.

REV	DATE	BY	DESCRIPTION	CHK	ENGR	APPR	CLIENT
4	13OCT09	JDK	RE-ISSUED FOR CONSTRUCTION	RAK	RK/JL/PS	GMK	
3	22MAY09	JDK	RE-ISSUED FOR CONSTRUCTION	RAK	RK/JB/JL	GMK	
2	30OCT08	JDK	RE-ISSUED FOR CONSTRUCTION	RAK	RK/JL/PS	SVS	
1	09MAY08	JDK	RE-ISSUED FOR CONSTRUCTION	RAK	JC/PS/JL	SVS	
0	01OCT07	JDK	ISSUED FOR CONSTRUCTION	JTG	JC/ES/JB	SVS	

Wood Group Engineering (North Sea) Ltd.
MUSTANG INTERNATIONAL, LP
HOUSTON, TEXAS
PROJECT NO. 10910

bp

VALHALL
RE-DEVELOPMENT PROJECT
PIPING & INSTRUMENT DIAGRAM
3RD STAGE DISCHARGE COOLER

REGISTRATION CODES			DRAWING NO.						SCALE
AREA	SYSTEM	TYPE	FACILITY CODE	ORIG.	DISP.	SEQ. No.	SHEET		NONE
T44-02	24	XB	PH	ME	P	0180	001	REV. 4	

A1

MEI Project: 10910 - I:\10910\PID\WORKING P&ID FOLLOW-ON 2009\PH-ME-P-0195-004.DWG 15OCT09 1226 SF 25.4D IMP JIKELLE

25-HX-9105B
GAS - GAS INTERCHANGER

TYPE: PCHE

DUTY: 30980 KW

A PASS: DESIGN: 105 BARG AT 90°C/MIN. -100°C
OPERATING: 70 BARG AT 25°C/MIN. -27°C
B PASS: DESIGN: 105 BARG AT 90°C/MIN. -100°C
OPERATING: 49 BARG AT 20.2°C/MIN. -37.3°C
C PASS: DESIGN: 105 BARG AT 90°C/MIN. -100°C
OPERATING: 34.5 BARG AT 20.1°C/MIN. -46.1°C
MATERIAL: 316/316LSS

25-XX-9148
GAS - GAS INTERCHANGER SKID

25-HX-9105B
TRIM: 0200-PV-25L91962-ES20-0

INJECTION QUILL ASSEMBLY 25 AE 92846-C1

FROM MEOH INJECTION PUMP PH-ME-P-0180-003 0050-CA-43L93753-GR25-0

(COLD SEPARATOR OVERHEAD, GAS) FROM GAS/GAS INLET HEADER PH-ME-P-0180-003 0800-PV-25L91955-ES20-2B 2R 100 N

(3RD STAGE DISCH. COOLER) FROM GAS/GAS INLET HEADER PH-ME-P-0180-003 1000-PV-25L91767-ES20-0

(COLD SEPARATOR BOTTOMS, LIQUID) FROM GAS/GAS INLET HEADER PH-ME-P-0180-003 0800-PL-25L91959-ES20-2B 2R 125 N

0050-CA-43L93754-GR25-0

INJECTION QUILL ASSEMBLY 25 AE 92846-C2

0200 0200 GR25 ES20 (NOTE 8)

(NOTE 3) (NOTE 1) (NOTE 5) (NOTE 6) (NOTE 4) (NOTE 2) (NOTE 7)

0400-PV-25L91987-ES20-0
0600-PV-25L91997-ES20-0
0400-PV-25L91988-ES20-0
0600-PV-25L91998-ES20-0
0400-PV-25L91989-ES20-0
0600-PV-25L91999-ES20-0
0400-PV-25L91990-ES20-0
0600-PV-25L92000-ES20-0
0400-PV-25L91991-ES20-0
0600-PV-25L92001-ES20-0

0800-PV-25L91995-ES20-0

(TO 4TH STG. COMPRESSOR) TO GAS/GAS INTERCHANGER OUTLET HEADER PH-ME-P-0195-005

0800-PV-25L91995-ES20-0

(TO COLD SEPARATOR) TO GAS/GAS INTERCHANGER OUTLET HEADER PH-ME-P-0195-005

1000-PV-25L91986-ES20-2B

(TO 3RD STG. SUCT. SCRUBBER) TO GAS/GAS INTERCHANGER OUTLET HEADER PH-ME-P-0195-005

0800-PV-25L92004-ES20-0

CONTINUED ON DWG. PH-ME-P-0180-003

CONTINUED ON DWG. PH-ME-P-0195-005

NOTES:
1. FIVE SEPARATE CELLS INTERNALLY.
2. MAINTENANCE DROP OUT SPOOLS.
3. PROCESS FLOW STREAMLINES REMAIN SEPARATED IN THE INLET CHAMBER.
4. 'A' PASS.
5. 'B' PASS.
6. 'C' PASS.
7. DATA HWY. TIES THE PDI'S TO THE XV'S.
8. THIS BOUNDARY REPRESENTATION IS ACTUALLY MULTIPLE CHAMBERS (i.e. ONE FOR EACH STREAM LINE).

REV	DATE	BY	DESCRIPTION	CHK	ENGR	APPR	CLIENT
4	16OCT09	JDK	RE-ISSUED FOR CONSTRUCTION	RAK	RK/JL/PS	GMK	
3	22MAY09	JDK	RE-ISSUED FOR CONSTRUCTION	RAK	RK/JB/JL	GMK	
2	30OCT08	JDK	RE-ISSUED FOR CONSTRUCTION	RAK	RK/JL/PS	SVS	
1	09MAY08	JDK	RE-ISSUED FOR CONSTRUCTION	RAK	JC/PS/JL	SVS	
0	01OCT07	JDK	ISSUED FOR CONSTRUCTION	JTG	JC/ES/JB	SVS	

Wood Group Engineering (North Sea) Ltd.

MUSTANG INTERNATIONAL, LP
HOUSTON, TEXAS

PROJECT NO. 10910

bp

VALHALL
RE-DEVELOPMENT PROJECT
PIPING & INSTRUMENT DIAGRAM
GAS-GAS INTERCHANGER "B"

REGISTRATION CODES			DRAWING NO.						SCALE
AREA	SYSTEM	TYPE	FACILITY CODE	ORIG.	DISP.	SEQ. No.	SHEET		NONE
T34-02	25	XB	PH	ME	P	0195	004	REV. 4	

Field for file specification:
Field for date and time :

A1

25-XX-9148
GAS – GAS INTERCHANGER SKID

25-XX-9148
SKID LIMITS

LT. FLARE HDR.
PH-ME-P-0272-001
0400-VF-31L92691-AS23-0

0400-VF-31L92705-AS23-0

PH-ME-P-0196-001 0400-VF-31L92700-AS23-0

PH-ME-P-0180-003 0300-VF-31L92670-AS23-0

0400x0300

FROM COLD SEPARATOR OVHD.
PH-ME-P-0195-003 0800-PV-25L91974-ES20-0

1400-PV-25L92007-ES20-0

1400 CHESSOL 25-C-93027 (NOTE 1)

0300-PV-25L92011-ES20-0

0300-PV-25L92012-ED20-0

0200-GF-42L93526-ED20-0

0200-GF-42L93508-ED20-0 BUY BACK GAS PH-ME-P-0317-001

1400-PV-25L91953-ED20-6C TO 4TH STAGE COMPRESSOR SUCTION PH-ME-P-0205-002

1400-PV-25L92008-ED20-0

FROM COLD SEPARATOR OVHD.
PH-ME-P-0195-004 0800-PV-25L91995-ES20-0

0200-DC-81L96420-ED20-0 (NOTE 2)

0200-DC-81L96443-ES20-0

LT. CLOSED DRAIN HDR.
PH-ME-P-0278-004

FROM 3RD STAGE COMPRESSOR DISCHARGE
PH-ME-P-0195-003 1000-PV-25L91984-ES20-2B

FROM 3RD STAGE COMPRESSOR DISCHARGE
PH-ME-P-0195-004 1000-PV-25L91986-ES20-2B

1400-PV-25L92005-ES20-2B

1400-PV-25L92006-ES20-2B TO COLD SEPARATOR PH-ME-P-0196-001

CONTINUED ON PH-ME-P-0195-003 & 0195-004

FROM COLD SEPARATOR BOTTOMS BYPASS
PH-ME-P-0180-003 1000-PL-25L91964-ES20-2B

FROM TV-92929 BYPASS
PH-ME-P-0180-003 1200-PL-25L91964-ES20-2B

0300-VF-31L92692-AS23-0

0300-VF-31L92690-AS23-0

1200-PL-25L91964-ES20-0

0200-PV-25L91992-ES20-0

0200-PV-25L91993-ES20-0

1200-PV-25L91965-ES20-0

0300-PV-25L92038-ES20-0

0300-PV-25L92039-DS20-0

1200-PV-25L91967-DS20-0

FROM GAS/GAS INTERCHANGER COLD SEP. BOTTOMS
PH-ME-P-0195-004 0800-PV-25L92004-ES20-0

FROM GAS/GAS INTERCHANGER COLD SEP. BOTTOMS
PH-ME-P-0195-003 0800-PV-25L91983-ES20-0

0200-PL-23LXXXX-JD20-0 FROM 2ND STAGE INJECTION SUCTION SCRUBBER PH-ME-P-0215-001

0400-PL-23LXXXX-FD20-0 FROM 1ST STAGE INJECTION SUCTION SCRUBBER PH-ME-P-0208-001

1200-PV-25L92010-DS20-0 TO 3RD STAGE SUCTION SCRUBBER PH-ME-P-0171-001

NOTES:
1. ANTI-SLAM DESIGN.
2. DRAIN AND PURGE POINT.
3. KEY INTERLOCKED VALVE.

REV	DATE	BY	DESCRIPTION	CHK	ENGR	APPR	CLIENT
4	16OCT09	JDK	RE-ISSUED FOR CONSTRUCTION	RAK	RK/JL/PS	GMK	
3	22MAY09	JDK	RE-ISSUED FOR CONSTRUCTION	RAK	RK/JB/JL	GMK	
2	03DEC08	CDB	RE-ISSUED FOR CONSTRUCTION	RAK	RK/PS/JL	DR	
1	09MAY08	JDK	RE-ISSUED FOR CONSTRUCTION	RAK	JC/PS/JL	SVS	
0	01OCT07	JDK	ISSUED FOR CONSTRUCTION	JTG	JC/ES/JB	SVS	

Wood Group Engineering (North Sea) Ltd.

MUSTANG INTERNATIONAL, LP
HOUSTON, TEXAS

PROJECT NO. 10910

bp

VALHALL
RE-DEVELOPMENT PROJECT
PIPING & INSTRUMENT DIAGRAM
GAS-GAS INTERCHANGER OUTLET HDR.

REGISTRATION CODES			DRAWING NO.					SCALE
AREA	SYSTEM	TYPE	FACILITY CODE	ORIG.	DISP.	SEQ. No.	SHEET	NONE
T34-02	25	XB	PH	ME	P	0195	005	REV. 4

Field for file specification:
Field for date and time :

A1

MEI Project: 10910 – I:\10910\PID\WORKING P&ID FOLLOW-ON 2009\PH-ME-P-0199-001.DWG 15OCT09 1222 SF 25.40 IMP J1KELLE

27-XX-9119
4TH STAGE COMPRESSOR SKID

27-KA-9104
4TH STAGE COMPRESSOR
CAPACITY: 4.1MM SM3/D AT 77.2 DELTA BAR
DRIVER: 7500 KW AT 12000 RPM

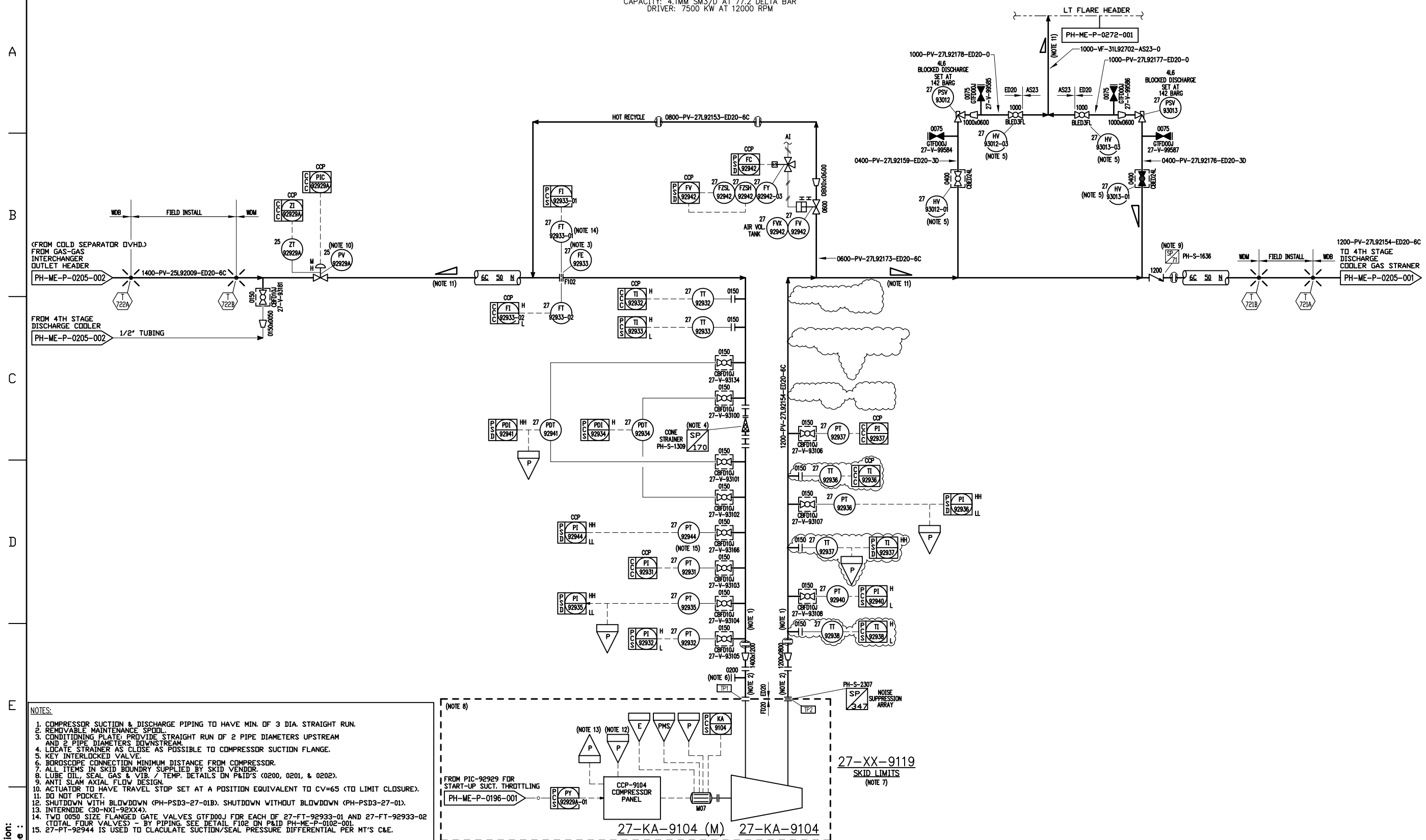

NOTES:

1. COMPRESSOR SUCTION & DISCHARGE PIPING TO HAVE MIN. OF 3 DIA. STRAIGHT RUN.
2. REMOVABLE MAINTENANCE SPOOL.
3. CONDITIONING PLATE: PROVIDE STRAIGHT RUN OF 2 PIPE DIAMETERS UPSTREAM AND 2 PIPE DIAMETERS DOWNSTREAM.
4. LOCATE STRAINER AS CLOSE AS POSSIBLE TO COMPRESSOR SUCTION FLANGE.
5. KEY INTERLOCKED VALVE.
6. BOROSCOPE CONNECTION MINIMUM DISTANCE FROM COMPRESSOR.
7. ALL ITEMS IN SKID BOUNDRY SUPPLIED BY SKID VENDOR.
8. LUBE OIL, SEAL GAS & VIB. / TEMP. DETAILS ON P&ID'S (0200, 0201, & 0202).
9. ANTI SLAM AXIAL FLOW DESIGN.
10. ACTUATOR TO HAVE TRAVEL STOP SET AT A POSITION EQUIVALENT TO CV=65 (TO LIMIT CLOSURE).
11. DO NOT POCKET.
12. SHUTDOWN WITH BLOWDOWN (PH-PSD3-27-01B). SHUTDOWN WITHOUT BLOWDOWN (PH-PSD3-27-01).
13. INTERNODE (30-NXI-92XX4).
14. TWO 0050 SIZE FLANGED GATE VALVES GTFD00J FOR EACH OF 27-FT-92933-01 AND 27-FT-92933-02 (TOTAL FOUR VALVES) – BY PIPING. SEE DETAIL F102 ON P&ID PH-ME-P-0102-001.
15. 27-PT-92944 IS USED TO CLACULATE SUCTION/SEAL PRESSURE DIFFERENTIAL PER MT'S C&E.

NOTES:

REV	DATE	BY	DESCRIPTION	CHK	ENGR	APPR	CLIENT
4	16OCT09	JDK	RE-ISSUED FOR CONSTRUCTION	RAK	RK/JL/PS	GMK	
3	22MAY09	JDK	RE-ISSUED FOR CONSTRUCTION	RAK	RK/JB/JL	GMK	
2	30OCT08	JDK	RE-ISSUED FOR CONSTRUCTION	RAK	RK/JL/PS	SVS	
1	09MAY08	JDK	RE-ISSUED FOR CONSTRUCTION	RAK	JC/PS/JL	SVS	
0	01OCT07	JDK	ISSUED FOR CONSTRUCTION	JTG	JC/ES/JB	SVS	

Wood Group Engineering (North Sea) Ltd.

MUSTANG INTERNATIONAL, LP
HOUSTON, TEXAS

PROJECT NO. 10910

bp

VALHALL
RE-DEVELOPMENT PROJECT
PIPING & INSTRUMENT DIAGRAM
4TH STAGE COMPRESSOR

REGISTRATION CODES			DRAWING NO.						SCALE
AREA	SYSTEM	TYPE	FACILITY CODE	ORIG.	DISP.	SEQ. No.	SHEET		NONE
T44-02	27	XB	PH	ME	P	0199	001	REV. 4	

Field for file specification:
Field for date and time :

A1

27-HX-9107
4th STAGE DISCHARGE COOLER
DUTY: 8058 kW
TYPE: PCHE
DESIGN: (SIDE A) 142 BARG / FULL VAC. AT 125 °C MIN. -30°C
OPERATING: 125 BARG AT 102°C
DESIGN: (SIDE B) 142 BARG / FULL VAC AT 125 °C MIN. -30°C
OPERATING: 6 BARG AT 20°C
MATERIAL: 22Cr DUPLEX

27-XX-9118
4th STAGE DISCHARGE COOLER SKID

LP FLARE HEADER PH-ME-P-0270-001
LT FLARE HEADER PH-ME-P-0272-001
0800-VF-31L92714-AS23-0
0800-VF-31L92711-AS23-0
0800-PV-27L92166-ED20-0
0400-PV-27L92165-ES20-0
0400-PV-27L92174-ED20-0
0400-PV-27L92151-ES20-0 TO GAS-GAS (INLET HEADER) PH-ME-P-0180-003
1000-VF-31L92848-AS23-0
0800-VF-31L92846-ED20-0
0800-VF-31L92847-ED20-0
0800-VF-31L92903-AS23-0
0800-VF-31L92904-AS23-0
1200-VF-31L92712-AS23-0
0300-PV-27L92164-ED20-0
1/2" TUBING
1/4" TUBING
FROM 27-KA-9104 4th STAGE GAS DISCHARGE STRAINERS PH-ME-P-0205-001
1200-PV-27L92160-ED20-6C
1200-PV-27L92157-ED20-0
1200-PV-27L92158-ED20-0
1200-PV-27L92167-ED20-0
1200-PV-27L92169-ES20-0
1200-PV-27L92155-ED20-0
0400-PV-27L92172-ED20-0
0400-PV-27L92175-ED20-0
0400-PV-27L92180-EC11S-0
0400-PV-27L92179-EC11S-0
1200-PV-27L92170-EC11S-0
TO WP/IP METERS PH-ME-P-0322-001
CORROSION COUPON WITH FITTING
TO HAZ. OPEN DRAIN PH-ME-P-0205-001
0200-WC-45L94494-AS20-0
TO 4TH STAGE COMPRESSOR SUCTION PH-ME-P-0199-001
TO TIC-93004 PH-ME-P-0205-001
FROM 45-CA-9116A/B 4th STAGE COOLING MEDIUM STRAINERS PH-ME-P-0205-001
0600-WC-45L94492-AS20-0
TO 25-TIC-92929A PH-ME-P-0196-001
LOW POINT
WOBBE INDEX
AIR VOL TANK
CCP
1400-PV-25L91954-ED20-6C
1400-PV-25L92009-ED20-6C TO 4TH STAGE COMPRESSOR SUCT. PH-ME-P-0199-001
TO 1st STAGE GAS INJECTION SUCTION SCRUBBER PH-ME-P-0208-001
0200-PV-23L9XXXX-ED20-0
0600-WC-45L94500-AD20-1C HOT COOLING MEDIUM RETURN PH-ME-P-0265-001
0600-WC-45L94495-AD20-1C
0200-WC-45L94498-AD20-4C TO COOLING MEDUIM RETURN HEADER PH-ME-P-0265-001
0200-WC-45L94497-AD20-4C
0200-WC-45L94496-AD20-3D
0200-DC-81L96470-ED20-0
0200-DC-81L96447-ED20-0
1400-PV-25L91953-ED20-6C FROM COLD SEPARATOR OVERHEAD PH-ME-P-0195-005
LT CLOSED DRAIN HDR. PH-ME-P-0278-004
27-XX-9118 SKID LIMITS
CONTINUED ON PH-ME-P-0205-001

NOTES:
1. KEY INTERLOCKED VALVE.
2. MAINTENANCE DROP OUT SPOOLS.
3. COOLING MEDIUM DRAINS TO BE LOCATED EITHER ON PIPING OR EQUIPMENT AND SHALL BE AT LOW POINT.
4. MINIMUM DISTANCE 1 METER.
5. LOCATE ESDV93019A/B AND YSV93016 AS NEAR THE BRIDGE INTERFACE AS PRACTICAL.
6. KEY LOCKED VALVE.
7. LOCATE VALVE AS CLOSE AS POSSIBLE TO TEE AND PROVIDE 1 METER OF STRAIGHT RUN DOWNSTREAM.
8. ANTI SLAM DESIGN.
9. DO NOT POCKET.
10. A MINIMUM OF FREE SPACE OF 2M ABOVE & 300MM AROUND THE CENTERLINE OF THE FITTING IS REQUIRED FOR HYDRAULIC RETRIEVAL TOOL.
11. DELETED.
12. 27-AT-93008 (GC SHELTER) MOUNTED OFF SKID.
13. DRAIN AND PURGE POINT.
14. RESTRICTION ORIFICE TO LIMIT FLOW AND PREVENT OVERPRESSURE OF "A" CLASS DRAIN HEADER.

Field for file specification:
Field for date and time :

REV	DATE	BY	DESCRIPTION	CHK	ENGR	APPR	CLIENT
4	16OCT09	JDK	RE-ISSUED FOR CONSTRUCTION	RAK	RK/AL/PS	GMK	
3	22MAY09	JDK	RE-ISSUED FOR CONSTRUCTION	RAK	RK/AB/AL	GMK	
2	14NOV08	JDK	RE-ISSUED FOR CONSTRUCTION	RAK	RK/AL/PS	SVS	
1	09MAY08	JDK	RE-ISSUED FOR CONSTRUCTION	RAK	JC/PS/AL	SVS	
0	01OCT07	JDK	ISSUED FOR CONSTRUCTION	JTG	JC/ES/AB	SVS	

Wood Group Engineering (North Sea) Ltd.
MUSTANG INTERNATIONAL, LP
HOUSTON, TEXAS
PROJECT NO. 10910

bp

VALHALL
RE-DEVELOPMENT PROJECT
PIPING & INSTRUMENT DIAGRAM
4TH STAGE DISCHARGE COOLER

REGISTRATION CODES			DRAWING NO.						SCALE
AREA	SYSTEM	TYPE	FACILITY CODE	ORIG.	DISP.	SEQ. No.	SHEET		NONE
T34-01	27	XB	PH	ME	P	0205	002		REV. 4

A1